Cisal
TEL. (+39) 0322 918111
MAIL. cisal@cisal.it

Bañera sobre columnas de suelo GRACE_GL004200

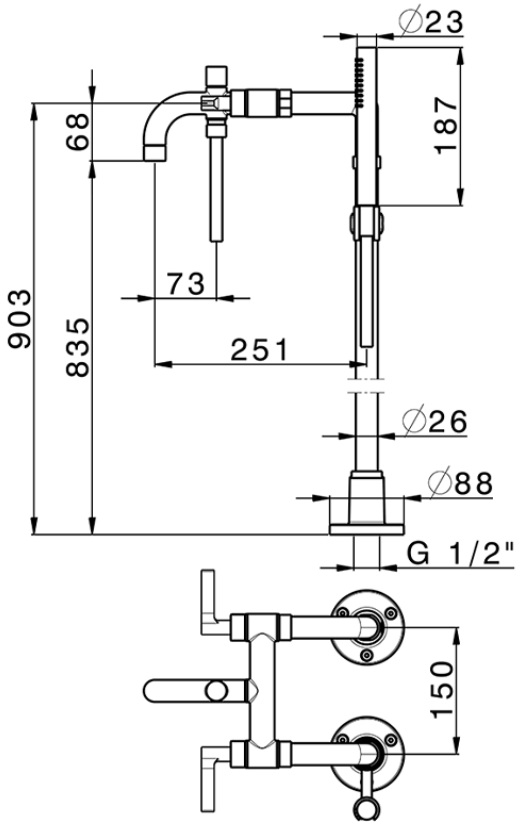

GL004200

https://es.cisal.it/banera-sobre-columnas-de-suelo-grace-gl004200

2026-09-16

© 2021 Cisal. Via Pietro Durio 160 - 28010 - Alzo (NO) - Italia
Mail: cisal@cisal.it, Telefono: (+39) 0322 918111, P.Iva IT02422810032.