Cisal
TEL. (+39) 0322 918111
MAIL. cisal@cisal.it

Toma de agua SHOWER_DS017320

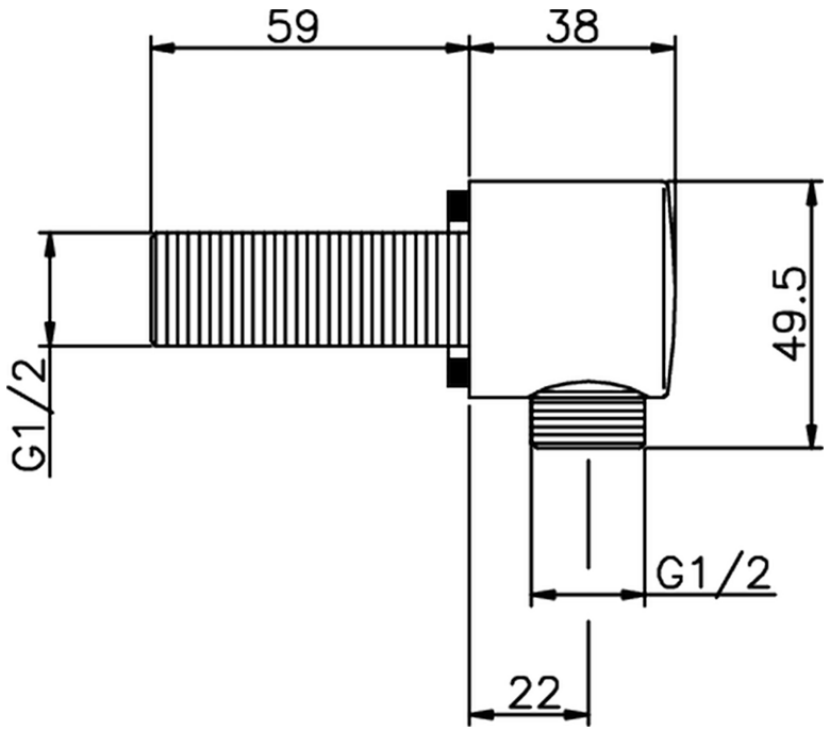

DS017320

https://es.cisal.it/toma-de-agua-shower-ds017320

2026-09-14

© 2021 Cisal. Via Pietro Durio 160 - 28010 - Alzo (NO) - Italia
Mail: cisal@cisal.it, Telefono: (+39) 0322 918111, P.Iva IT02422810032.