Cisal
TEL. (+39) 0322 918111
MAIL. cisal@cisal.it

Parte externa termostático ducha emp. 1 salida LESS MINIMAL_LN007300

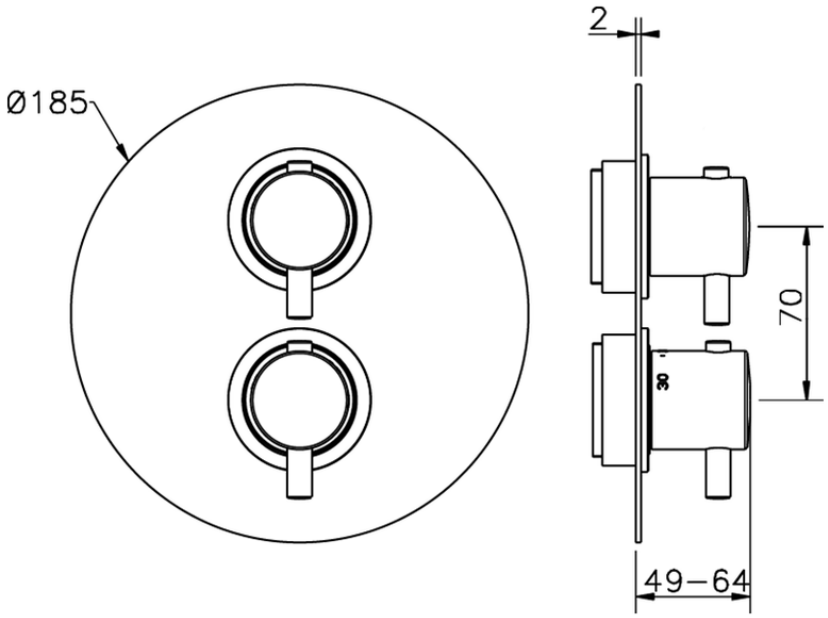

LN007300 https://es.cisal.it/parte-externa-termostatico-ducha-emp-1-salida-less-minimal-ln007300

© 2021 Cisal. Via Pietro Durio 160 - 28010 - Alzo (NO) - Italia
Mail: cisal@cisal.it, Telefono: (+39) 0322 918111, P.Iva IT02422810032.

Cisal
TEL. (+39) 0322 918111
MAIL. cisal@cisal.it

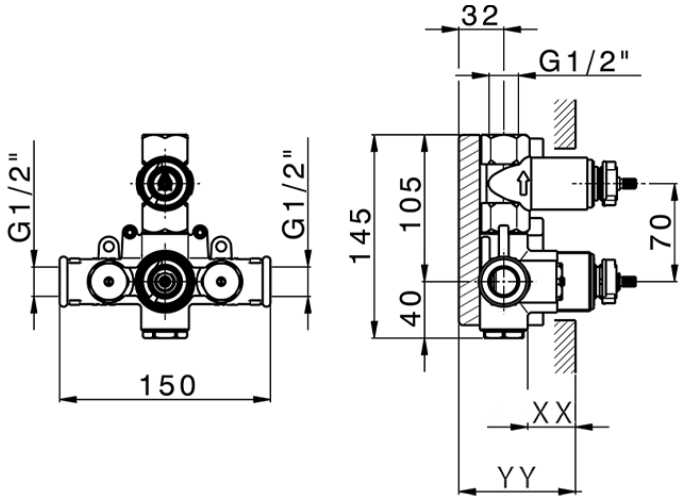

Piastra/Plate/Plaque/Platte/Placa
2-3mm: XX 25-40 YY 76-91
10mm: XX 16-31 YY 65-80

ZA007301 https://es.cisal.it/parte-empotrada-termostatico-ducha-1-salida-empotrado-za007301

2026-09-13

© 2021 Cisal. Via Pietro Durio 160 - 28010 - Alzo (NO) - Italia
Mail: cisal@cisal.it, Telefono: (+39) 0322 918111, P.Iva IT02422810032.