Cisal
TEL. (+39) 0322 918111
MAIL. cisal@cisal.it

Parte externa monomando ducha empotrada ROADSTER ACCENT_RA003000

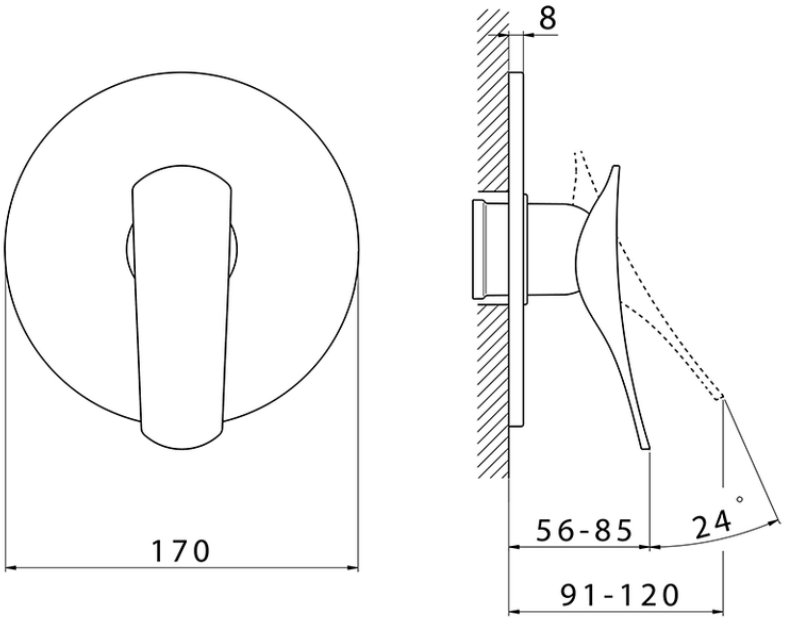

RA003000 https://es.cisal.it/parte-externa-monomando-ducha-empotrada-roadster-accent-ra003000

© 2021 Cisal. Via Pietro Durio 160 - 28010 - Alzo (NO) - Italia
Mail: cisal@cisal.it, Telefono: (+39) 0322 918111, P.Iva IT02422810032.

Cisal
TEL. (+39) 0322 918111
MAIL. cisal@cisal.it

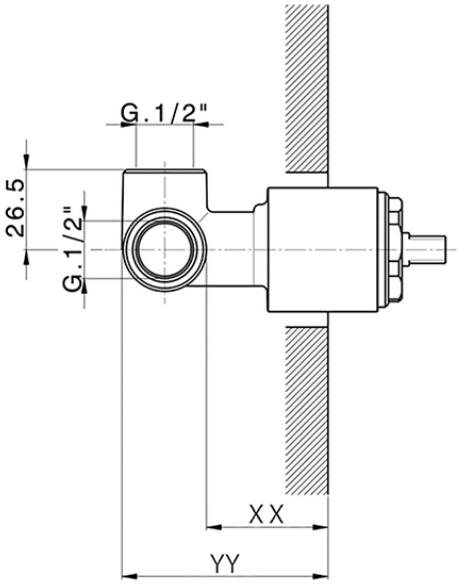

Piastra/Plate/Plaque/Platte/Placa
2-3mm: XX 27-47 YY 54-74
10mm: XX 16-40 YY 43-68

ZA005300

https://es.cisal.it/parte-empotrada-monomando-ducha-empotrado-za005300

2026-09-18

© 2021 Cisal. Via Pietro Durio 160 - 28010 - Alzo (NO) - Italia
Mail: cisal@cisal.it, Telefono: (+39) 0322 918111, P.Iva IT02422810032.