Lavabo monomando CLINIC_CL000512

cisal

CL 00051

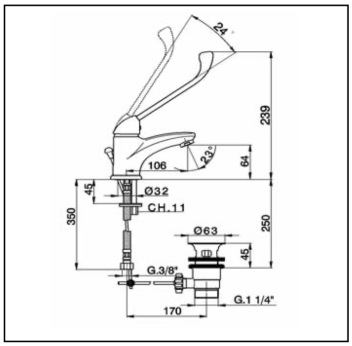

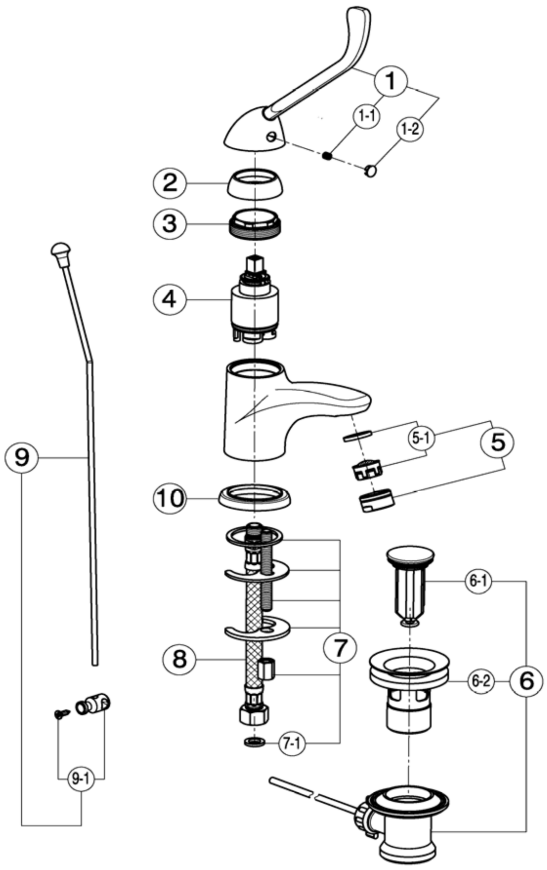

NR.	DESCRIZIONE DESCRIPTION BESCREIBUNG DESCRIPTION	N.CODICE CODE NO. WERSKNR. NR.CODE
1	Leva monocomando "CL" Lever "CL" Hebel "CL" Levier "CL"	ZA005020
1-1	Grano punta coppa inox M.5x6 Screw-stainless steel M.5x6 Madenschraube M.5x6 Vis speciale inox M.5x6	ZZ940630
1-2	Placchetta per leva Cap for lever Abdeckkappe f/Hebel Plaquette levier	ZZ927100
2	Copricartuccia senza ideogrammi Escutcheon catridge without ideogram Abdeckkappe ohne Ideogramm Couvre-cartouche sans ideogramme	ZZ940650
3	Calotta bloccaggio cartuccia Nut for mixing valve Mutter f/kartusche Ecrou pour cartouche	ZZ940660
4	Cartuccia monocomando Mixing valve Kartusche Cartouche mitigeurs	ZZ940340

NR.	DESCRIZIONE DESCRIPTION BESCREIBUNG DESCRIPTION	N.CODICE CODE NO. WERSKNR. NR.CODE
5	Aeratore M.24x1 IA Mousseur M.24x1 IA Perlator M.24x1 IA Mousseur M.24x1 IA	ZZ928360
5-1	Cartuccia per aeratore M. 24x1 Mousseur cartridge M.24x1 Kart. f/Perlator M.24x1 Cartouche x mousseur M.24x1	ZZ926950
6	Scarico automatico 1" 1/4 sabbiato Pop-up waste 1"1/4 Ablaufgarnitur 1" 1/4 Vidage automat. 1"1/4	ZZ929600
6-1	Tappo completo scarico automatico 1" 1/4 Plug for pop-up waste 1" 1/4 Stopfen f/Ablaufg. kpl 1" 1/4 Bonde - vidage 1"1/4	ZZ929250
6-2	Piletta per scarico automatico 1" 1/4 Waste for bath drain 1" 1/4 Ablauf f/Ablaufgarnitur 1" 1/4 Crépine pour vidage 1" 1/4	ZZ929240
7	Set installazione monocomando monoforo Installation set single hole Befestigungsset Set installation	ZZ940690

NR.	DESCRIZIONE DESCRIPTION BESCREIBUNG DESCRIPTION	N.CODICE CODE NO. WERSKNR. NR.CODE
7-1	Guarnizione fibra 3/8" Gasket rubber 3/8" Fiberdichtung 3/8" Joint en fibre 3/8"	ZZ926960
8	Flessibile M.11x1 3/8"F L.365 Flex M.11x1 3/8" L.365 Anschlussschlauch M.11x1 3/8" L.365 Flex M.11x1 3/8" L.365	ZZ928420
9	Astina scarico completa Ø4 Rod Ø4 Zugstange Ø4 Tige Ø4	ZZ940730
9-1	Morsetto astina scarico automatico Connection for pop-up rod Gelenkstueck f/Zugstange Jonction x tige vidage	ZZ933430
10	Basetta per monocomando Assembling ring for single lever mixer Basis fuer Einhebelmischer Bague pour mitigeur	ZA006040

CL000512

https://es.cisal.it/lavabo-monomando-clinic-cl000512

2026-04-29