Cisal
TEL. (+39) 0322 918111
MAIL. cisal@cisal.it

Dispensador Jabón ceramic ARCANA COMPLEMENTOS _AR090630

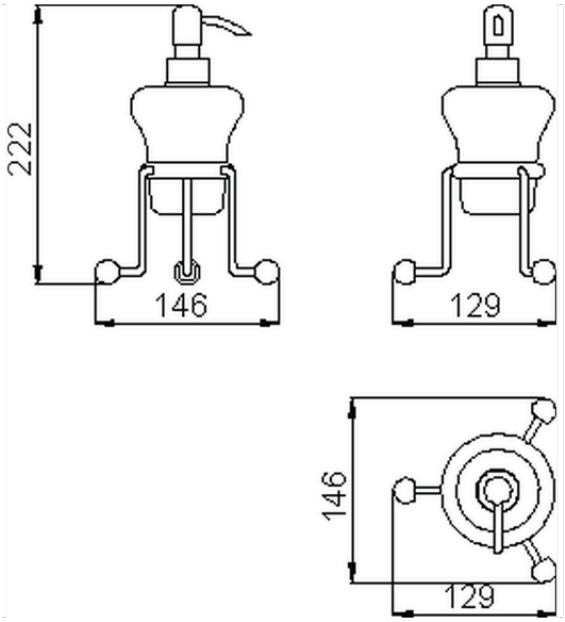

AR090630 https://es.cisal.it/dispensador-jabon-ceramic-arcana-complementos-ar090630

2026-09-15

© 2021 Cisal. Via Pietro Durio 160 - 28010 - Alzo (NO) - Italia
Mail: cisal@cisal.it, Telefono: (+39) 0322 918111, P.Iva IT02422810032.