Cisal
TEL. (+39) 0322 918111
MAIL. cisal@cisal.it

Parte externa monomando lavabo de pared GRACE_GC005510

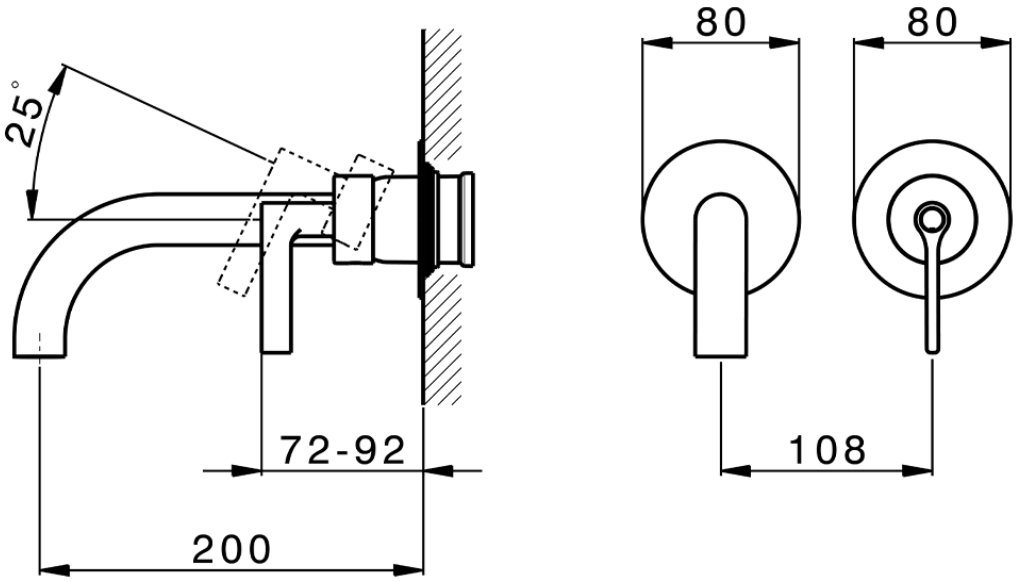

GC005510

https://es.cisal.it/parte-externa-monomando-lavabo-de-pared-grace-gc005510

2026-09-14

© 2021 Cisal. Via Pietro Durio 160 - 28010 - Alzo (NO) - Italia
Mail: cisal@cisal.it, Telefono: (+39) 0322 918111, P.Iva IT02422810032.