Cisal
TEL. (+39) 0322 918111
MAIL. cisal@cisal.it

Columna ducha monomando COLUMNAS DUCHA_ZS005020

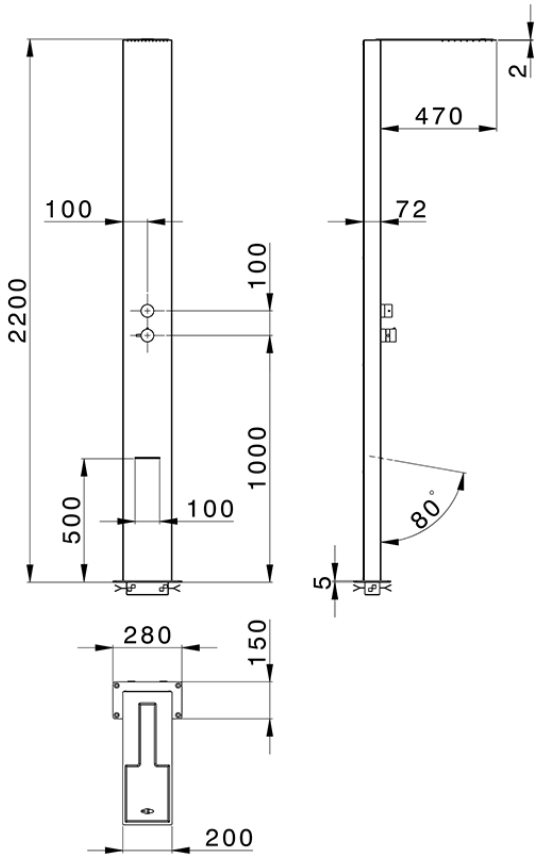

ZS005020

https://es.cisal.it/columna-ducha-monomando-columnas-ducha-zs005020

2026-03-11

© 2021 Cisal. Via Pietro Durio 160 - 28010 - Alzo (NO) - Italia
Mail: cisal@cisal.it, Telefono: (+39) 0322 918111, P.Iva IT02422810032.