Cisal
TEL. (+39) 0322 918111
MAIL. cisal@cisal.it

Set ducha higiénica para bidé Inox AISI 304 XION_XI007915

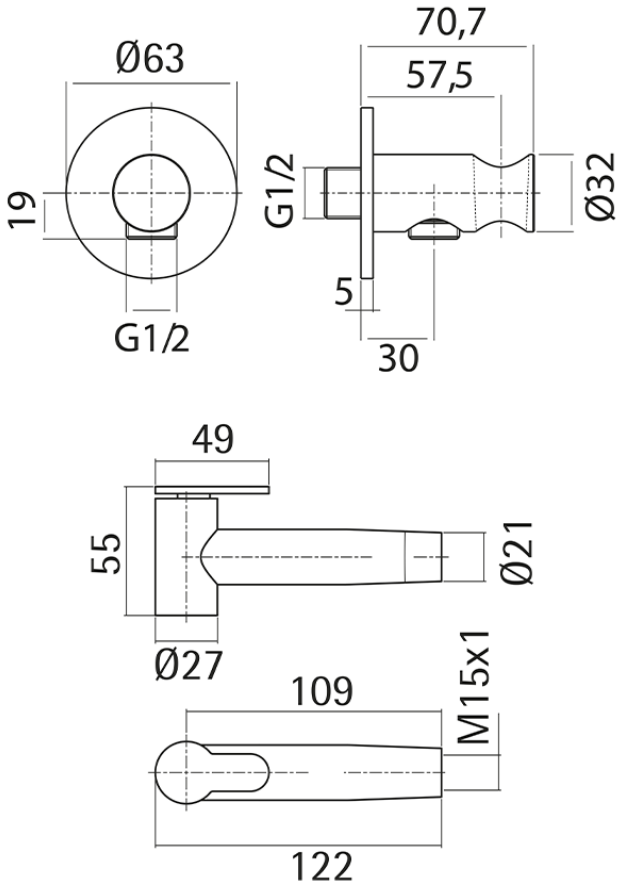

XI007915

https://es.cisal.it/set-ducha-higienica-para-bide-inox-aisi-304-xion-xi007915

2026-06-13

© 2021 Cisal. Via Pietro Durio 160 - 28010 - Alzo (NO) - Italia
Mail: cisal@cisal.it, Telefono: (+39) 0322 918111, P.Iva IT02422810032.