Cisal
TEL. (+39) 0322 918111
MAIL. cisal@cisal.it

Columna monomando ducha 2 funciones ARCANA ROYAL_AY004050

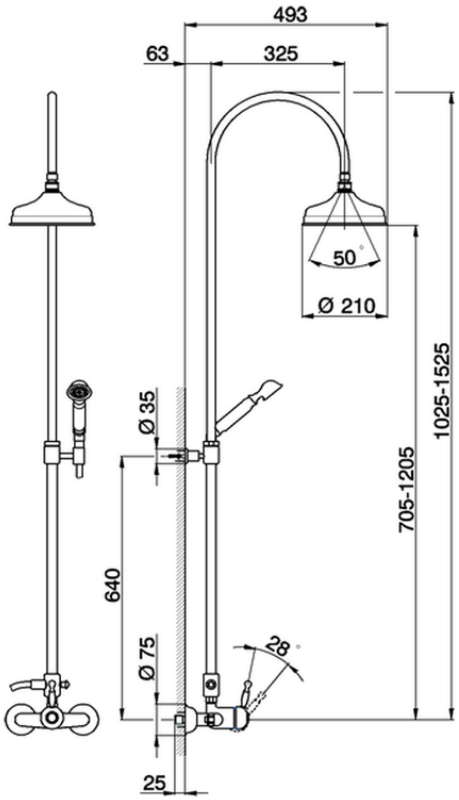

AY004050 https://es.cisal.it/columna-monomando-ducha-2-funciones-arcana-royal-ay004050

2026-03-14

© 2021 Cisal. Via Pietro Durio 160 - 28010 - Alzo (NO) - Italia
Mail: cisal@cisal.it, Telefono: (+39) 0322 918111, P.Iva IT02422810032.