Cisal
TEL. (+39) 0322 918111
MAIL. cisal@cisal.it

Fregadero monomando de pared KITCHEN_M3000400

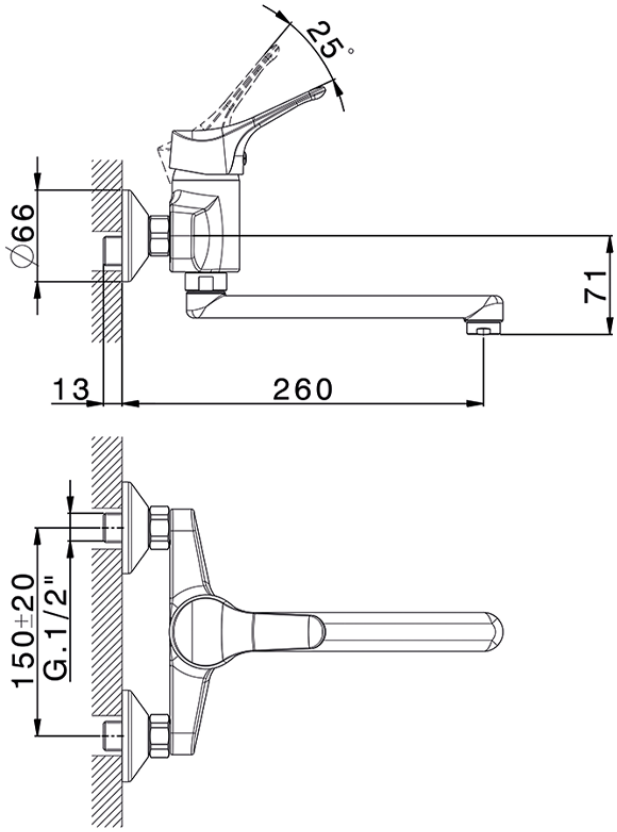

M3000400

https://es.cisal.it/fregadero-monomando-de-pared-kitchen-m3000400

2026-03-15

© 2021 Cisal. Via Pietro Durio 160 - 28010 - Alzo (NO) - Italia
Mail: cisal@cisal.it, Telefono: (+39) 0322 918111, P.Iva IT02422810032.