Parte externa monomando lavabo de pared NUANCE X32_X1005511

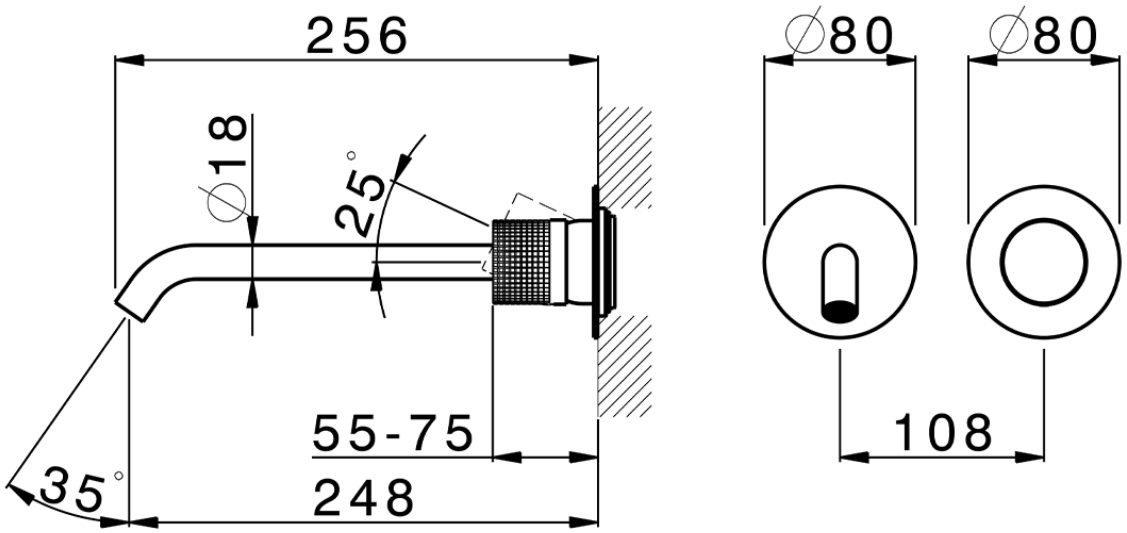

X1005511 https://es.cisal.it/parte-externa-monomando-lavabo-de-pared-nuance-x32-x1005511

2026-11-24

© 2021 Cisal. Via Pietro Durio 160 - 28010 - Alzo (NO) - Italia
Mail: cisal@cisal.it, Telefono: (+39) 0322 918111, P.Iva IT02422810032.