Cisal
TEL. (+39) 0322 918111
MAIL. cisal@cisal.it

Ducha termostática ALMA_A3T01010

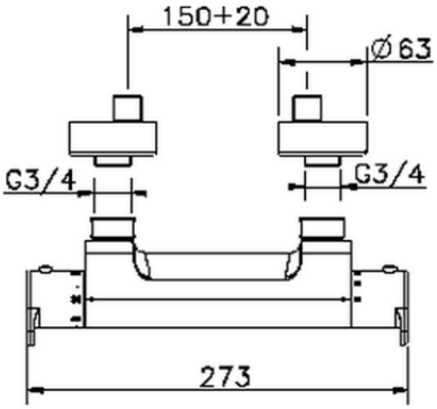

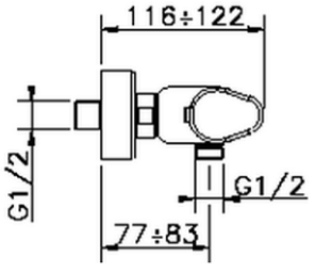

A3T01010

https://es.cisal.it/ducha-termostatica-alma-a3t01010

2026-09-16

© 2021 Cisal. Via Pietro Durio 160 - 28010 - Alzo (NO) - Italia
Mail: cisal@cisal.it, Telefono: (+39) 0322 918111, P.Iva IT02422810032.