Lavabo monomando EnergySave ALMA_A3000475

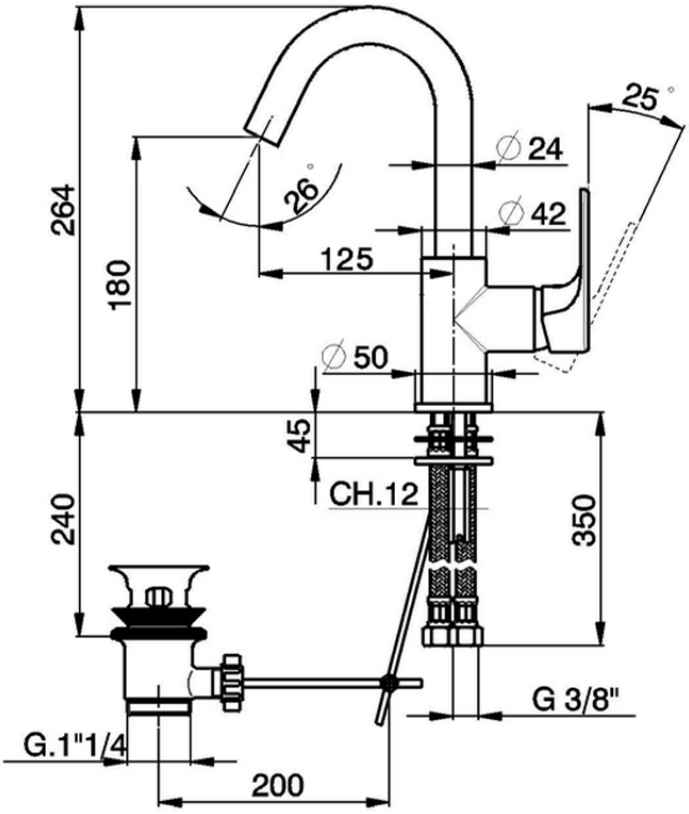

A3000475

https://es.cisal.it/lavabo-monomando-energysave-alma-a3000475

2026-09-16