# Fregadero monomando de pared KITCHEN_AY000400

## cisal

## AY 00040

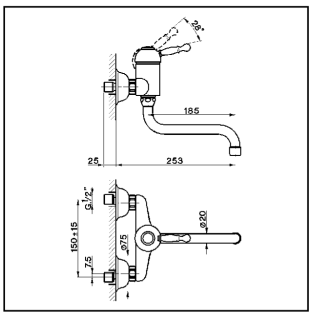


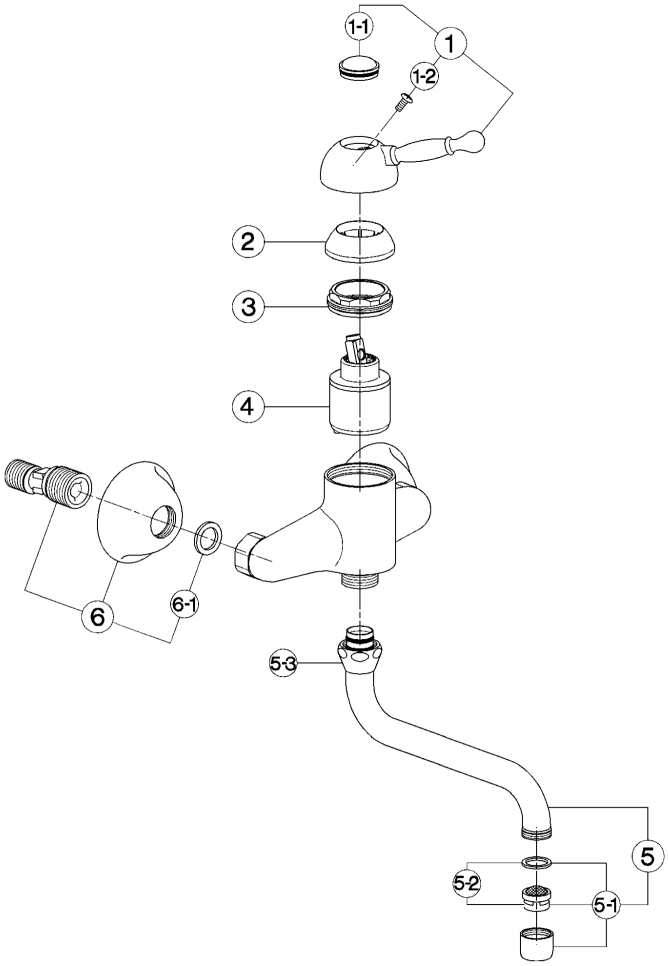


- **Monocomando lavello**
- ***Single lever sink mixer***
- **Einhand-Spültischbatterie**
- ***Mitigeur évier mural***

| bar | PORTATA BOCCA DI EROGAZIONE * *SPOUT FLOW RATE* DURCHFLUSS WANNENEINLAUF *DÉBIT BEC DÉVERSEUR* l/min. |
|---|---|
| 0.5 | 6 |
| 1 | 8 |
| 2 | 11.5 |
| 3 | 14 |
| 4 | 16 |
| 5 | 17.5 |

* con resistenza silenziosa della classe di portata A (15 l/min. a 3 bar)
*with hydraulic resistance of flow rate class A (15 l/min. at 3 bar)*
mit geräuscharmen Widerstand der Durchflussklasse A (15 l/min. bei 3 bar)
*avec aérateur classe A (15 l/min. à 3 bar)*

| NR. | DESCRIZIONE *DESCRIPTION* BESCHREIBUNG *DÉSCRIPTION* | N. CODICE *CODE NO.* WERKSNR. *NR. CODE* |
|---|---|---|
| 1 | Leva monocomando "AY"<br>*Lever "AY"*<br>Hebel "AY"<br>*Levier "AY"* | ZZ 90370 0 |
| 1-1 | Placchetta per leva "AY"<br>*Cap for lever "AY"*<br>Abdeckkappe f/Hebel "AY"<br>*Plaquette levier "AY"* | ZZ 93048 0 |
| 1-2 | Vite M.4,5x15 tb. tc.<br>*Screw M.4,5x15*<br>Schraube M.4,5x15<br>*Vis M.4,5x15* | ZZ 92641 0 |
| 2 | Copricartuccia senza ideogrammi<br>*Escutcheon cartridge without ideogram*<br>Abdeckkappe ohne Ideogramm<br>*Couvre-cartouche sans ideogramme* | ZZ 92718 0 |
| 3 | Calotta bloccaggio cartuccia piccola<br>*Nut for mixing valve-small*<br>Mutter f/Kartusche<br>*Ecrou pour cartouche* | ZZ 92603 0 |
| 4 | Cartuccia monocomando piccola<br>*Mixing valve - small size*<br>Kartusche<br>*Cartouche mitigeurs* | ZZ 92909 0 |

| NR. | DESCRIZIONE *DESCRIPTION* BESCHREIBUNG *DÉSCRIPTION* | N. CODICE *CODE NO.* WERKSNR. *NR. CODE* |
|---|---|---|
| 5 | Canna a S Ø20 interasse 185<br>*Swinging spout 185 Ø20*<br>Auslauf-Rohr-S-185 Ø20<br>*Bec orientable 185 Ø20* | ZZ 93397 0 |
| 5-1 | Aeratore M.22x1 IA Cascade<br>*Mousseur M.22x1 IA Cascade*<br>Perlator M.22x1 IA Cascade<br>*Mousseur M.22x1 IA Cascade* | ZZ 93345 0 |
| 5-2 | Cartuccia per aeratore M. 22x1 Cascade<br>*Mousseur cartridge M.22x1 Cascade*<br>Kart. f/Perlator M.22x1 Cascade<br>*Cartouche x mousseur M.22x1 Cascade* | ZZ 93339 0 |
| 5-3 | Calotta 3/4" es.29 Ø19,5<br>*Nut 3/4" Ø19,5*<br>Mutter 3/4" Ø19,5<br>*Ecrou 3/4" Ø19,5* | ZZ 92615 0 |
| 6 | Eccentrico con rosone "AC"<br>*Excentric connection with escutcheon "AC"*<br>S - Anschluss m.Rosette "AC"<br>*Excentrique + rosace "AC"* | ZZ 92826 0 |
| 6-1 | Guarnizione NBR 90 SH. 24x16x2,7<br>*Gasket NBR 90 SH. 24x16x2,7*<br>Dichtung NBR 90 SH. 24x16x2,7<br>*Joint NBR 90 SH. 24x16x2,7* | ZZ 92689 0 |

| NR. | DESCRIZIONE *DESCRIPTION* BESCHREIBUNG *DÉSCRIPTION* | N. CODICE *CODE NO.* WERKSNR. *NR. CODE* |
|---|---|---|

AY.3

AY000400 https://es.cisal.it/fregadero-monomando-de-pared-kitchen-ay000400

2026-09-13

© 2021 Cisal. Via Pietro Durio 160 - 28010 - Alzo (NO) - Italia
Mail: cisal@cisal.it, Telefono: (+39) 0322 918111, P.Iva IT02422810032.