Cisal
TEL. (+39) 0322 918111
MAIL. cisal@cisal.it

Parte externa monomando bañera de suelo LINEAVIVA_LV014200

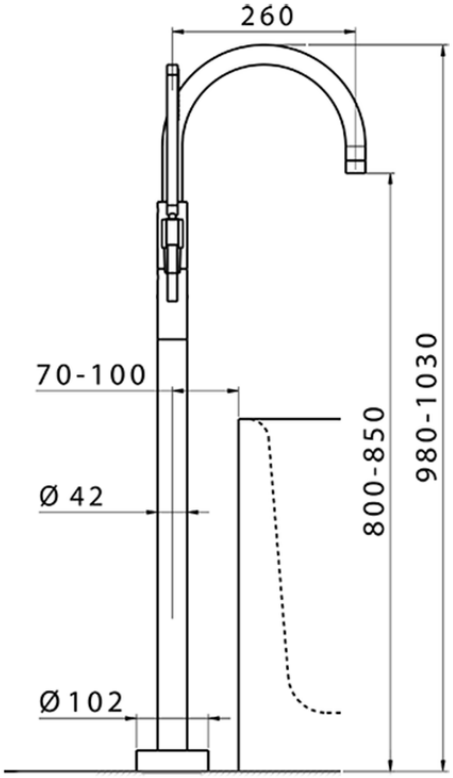

LV014200

https://es.cisal.it/parte-externa-monomando-banera-de-suelo-lineaviva-lv014200

© 2021 Cisal. Via Pietro Durio 160 - 28010 - Alzo (NO) - Italia
Mail: cisal@cisal.it, Telefono: (+39) 0322 918111, P.Iva IT02422810032.

Cisal
TEL. (+39) 0322 918111
MAIL. cisal@cisal.it

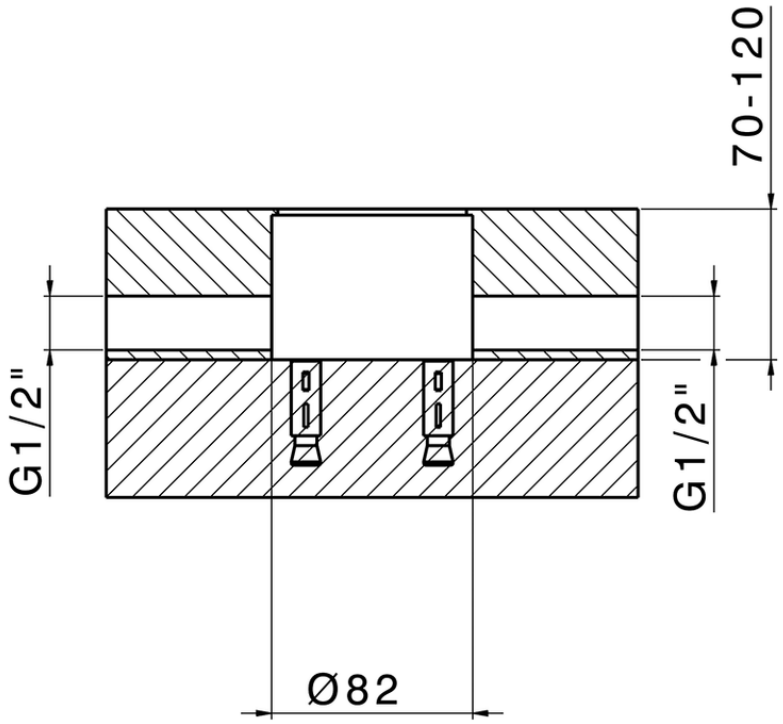

ZA004510

https://es.cisal.it/parte-empotrada-monomando-free-standing-empotrado-za004510

2026-09-14

© 2021 Cisal. Via Pietro Durio 160 - 28010 - Alzo (NO) - Italia
Mail: cisal@cisal.it, Telefono: (+39) 0322 918111, P.Iva IT02422810032.