Cisal
TEL. (+39) 0322 918111
MAIL. cisal@cisal.it

Válvula desagüe click-clack 1" 1/4 para lavabo COMPLEMENTOS_ZA001790

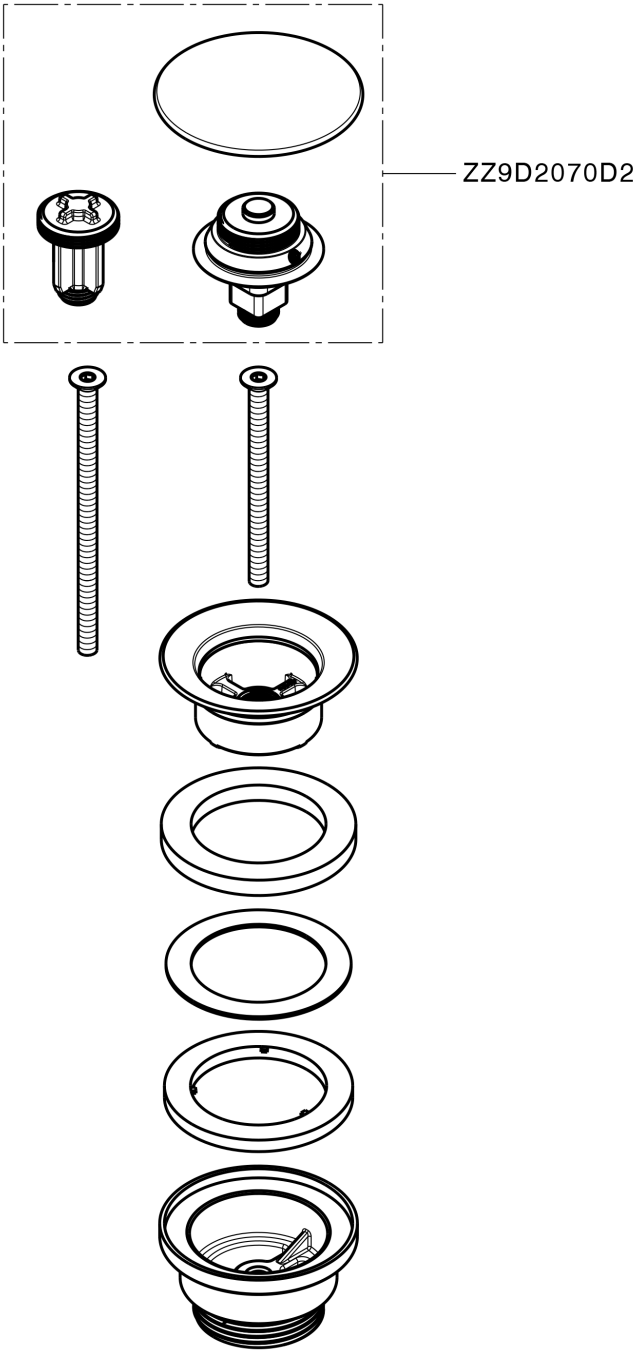

ZA001790 https://es.cisal.it/valvula-desague-click-clack-1-1-4-para-lavabo-complementos-za001790

2026-09-18

© 2021 Cisal. Via Pietro Durio 160 - 28010 - Alzo (NO) - Italia
Mail: cisal@cisal.it, Telefono: (+39) 0322 918111, P.Iva IT02422810032.