Cisal
TEL. (+39) 0322 918111
MAIL. cisal@cisal.it

Borde bañera 5 agujeros CHERIE_CF000260

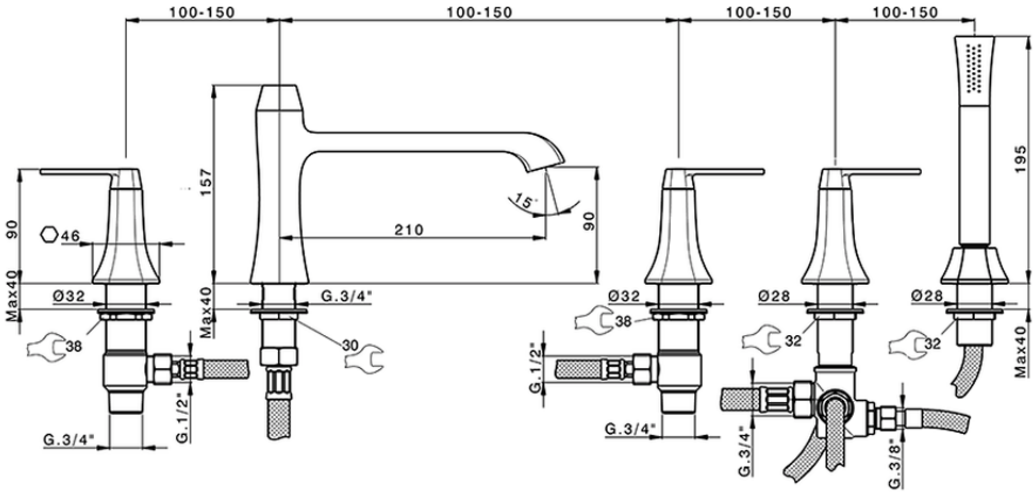

CF000260

https://es.cisal.it/borde-banera-5-agujeros-cherie-cf000260

2026-06-19

© 2021 Cisal. Via Pietro Durio 160 - 28010 - Alzo (NO) - Italia
Mail: cisal@cisal.it, Telefono: (+39) 0322 918111, P.Iva IT02422810032.