Borde bañera 4 agujeros ARCANA CERAMIC_AC000290

cisal

AC 00029

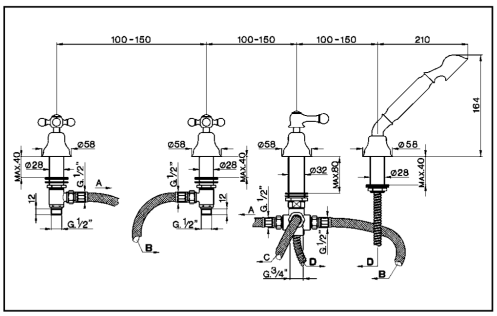

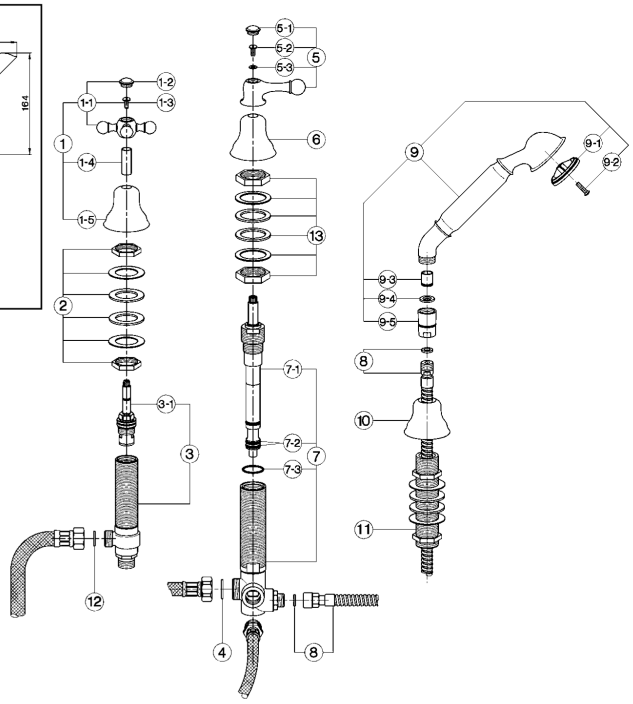

- **Batteria bordo vasca a 4 fori**
- ***Deck-mounted 4-hole bath mixer***
- **Brausebatterie - 4 Loch -**
- ***Mélangeur B/D 4-trous sur gorge***

bar	PORTATA * *FLOW RATE* DURCHFLUSS *DÉBIT* l/min.
0.5	14
1	20
2	29
3	35.5
4	41
5	46.5

* senza resistenza silenziosa (uscita libera)
without hydraulic resistance
ohne Widerstand
sans résistance hydraulique

NR.	DESCRIZIONE *DESCRIPTION* BESCHREIBUNG *DÉSCRIPTION*	N. CODICE *CODE NO.* WERKSNR. *NR. CODE*
1	Maniglia con cappuccio "AR" *Handle with escutcheon "AR"* Griff + Abdeckkappe "AR" *Croisillon + rosace "AR"*	ZZ 90093 0
1-1	Maniglia "AR" con vite e placchetta *Handle with screw and plate "AR"* Griff "AR" mit Schraube und Abdeckkappe *Croisillon avec vis et plaquette "AR"*	ZZ 90307 0
1-2	Placchetta a vite maniglia "AR" *Cap for handle "AR"* Abdeckkappe "AR" Griff *Plaquette cache - vis crois. "AR"*	ZZ 92617 0
1-3	Vite M.4,5x10 tb. tc. zigrinata *Screw M.4,5x10* Schraube M.4,5x10 *Vis M.4,5x10*	ZZ 92609 0
1-4	Tubetto copriasta "AR" H.31 *Tube "AR" H.31* Abdeckkappe Oberteil "AR" H.31 *Tube couvre-tête "AR" H.31*	ZZ 92620 0
1-5	Cappuccio a campana "AR" *Escutcheon "AR"* Abdeckkappe "AR" *Rosace "AR"*	ZZ 92598 0
2	Set installazione batteria lavabo *Installation set basin mixer* Befestigungsset *Set installation*	ZZ 92756 0
3	Piantana lavabo "AC" (se montata crociera) *Tail piece-basin mixer "AC" (mounted conn)* Unterteil-WT-"AC" (montiert Kreuzstck) *Corp lateral "AC" (raccord à croix)*	ZZ 92896 0
3-1	Vitone ceramico DX per batterie "AC" *Ceramic headvalve 1/2" right "AC"-long* Keramikoberteil 1/2"-rechts-"AC"-lang *Tête céramique 1/2" droite "AC" - longue*	ZZ 92859 0
4	Guarnizione NBR 90 SH. 24x16x2,7 *Gasket NBR 90 SH. 24x16x2,7* Dichtung NBR 90 SH. 24x16x2,7 *Joint NBR 90 SH. 24x16x2,7*	ZZ 92689 0
5	Deviatore centrale incasso "AR" *Diverter concealed "AR"* Griff fuer UP - umst. "AR" *Croisillon inverseur "AR"*	ZZ 90087 0

NR.	DESCRIZIONE *DESCRIPTION* BESCHREIBUNG *DÉSCRIPTION*	N. CODICE *CODE NO.* WERKSNR. *NR. CODE*
5-1	Placchetta a vite maniglia "AR" *Cap for handle "AR"* Abdeckkappe "AR" Griff *Plaquette cache - vis crois. "AR"*	ZZ 92617 0
5-2	Vite M.4,5x10 tb. tc. zigrinata *Screw M.4,5x10* Schraube M.4,5x10 *Vis M.4,5x10*	ZZ 92609 0
5-3	Rondella ottone 10x4,5x0,8 *Ring in brass 10x4,5x0,8* Unterlegscheibe 10x4,5x0,8 *Joint laiton 10x4,5x0,8*	ZZ 92663 0
6	Cappuccio per deviatore batteria vasca "AR" *Escutcheon for diverter "AR"* Abdeckkappe "AR" *Rosace inverseur "AR"*	ZZ 92953 0
7	Gruppo deviazione batteria bordo vasca "AR" *Diverter for bath mixer "AR"* Umsteller f/Wannenbatterie "AR" *Inverseur - B/D "AR"*	ZZ 92758 0
7-1	Vitone deviazione batteria vasca "AR" *Diverting valve for "AR" mixer* Umstellooberteil "AR" *Tête pour inverseur "AR"*	ZZ 90248 0
7-2	O.R. 11 NBR 75 SH. *O.R. 11 NBR 75 SH.* O.R. 11 NBR 75 SH. *O.R. 11 NBR 75 SH.*	ZZ 92690 0
7-3	Guarnizione fibra 27x24x1 *Gasket rubber 27x24x1* Fiberdichtung 27x24x1 *Joint en fibre rouge 27x24x1*	ZZ 92687 0
8	Flessibile 175 cm Ø14 3/8" x M.15x1 *Flex 175 cm Ø14 3/8" M.15x1* Brauseschlauch 175 cm Ø14 3/8" x M.15x1 *Flex 175 cm Ø14 3/8" x M.15x1*	ZZ 92757 0
9	Doccia per batteria vasca "AR" *Handshower for bath mixer "AR"* Handbrause-WB-"AR" *Douchette "AR" sur gorge*	ZZ 90336 0
9-1	Diffusore doccia "AR" *Spray-kit handshower "AR"* Einsatz f/Brause "AR" *Diffuseur douchette "AR"*	ZZ 90544 0

NR.	DESCRIZIONE *DESCRIPTION* BESCHREIBUNG *DÉSCRIPTION*	N. CODICE *CODE NO.* WERKSNR. *NR. CODE*
9-2	Vite di fissaggio diffusore per doccia in ottone *Fixing screw for spray-kit handshower* Befestigungsschraube f.Einsatz f.Br. in Messing *Vis fixation diffuseur pour douchette en laiton*	ZZ 92640 0
9-2	Vite di fissaggio diffusore per doccia in ABS *Fixing screw for spray-kit ABS handshower* Befestigungsschraube f. Einsatz f.Brause in ABS *Vis de fixation diffuseur pour douchette en ABS*	ZZ 93401 0
9-3	Valvola anti-ritorno Ø15 per doccia *Back-flow valve Ø15* Durchflussverhinderer Ø15 *Clapet anti-retour Ø15*	ZZ 92956 0
9-4	Guarnizione fibra 18,5x11x2 *Gasket rubber 18,5x11x2* Fiberdichtung 18,5x11x2 *Joint en fibre 18,5x11x2*	ZZ 92714 0
9-5	Raccordo conico doccia batteria vasca "AR" *Connection for shower "AR"* Anschluss "AR" *Raccord douche s/gorge "AR"*	ZZ 90337 0
10	Cappuccio supporto doccia bordo vasca "AR" *Escutcheon shower "AR"* Abdeckkappe "AR" *Rosace douche "AR"*	ZZ 92599 0
11	Supporto doccia batteria bordo vasca "AR" *Deck-mounted handshower support "AR"* Brausehalter "AR" *Support douche "AR"*	ZZ 90104 0
12	Guarnizione fibra 18,5x11x2 *Gasket rubber 18,5x11x2* Fiberdichtung 18,5x11x2 *Joint en fibre 18,5x11x2*	ZZ 92714 0
13	Set installazione deviatore batteria vasca *Installation set* Befestigungssatz f/Umsteller Wannenrandmtg *Set installation inverseur B/D*	ZZ 92797 0

AC.3

© 2021 Cisal. Via Pietro Durio 160 - 28010 - Alzo (NO) - Italia
Mail: cisal@cisal.it, Telefono: (+39) 0322 918111, P.Iva IT02422810032.