Cisal
TEL. (+39) 0322 918111
MAIL. cisal@cisal.it

Lavabo ARCANA CERAMIC_AC000510

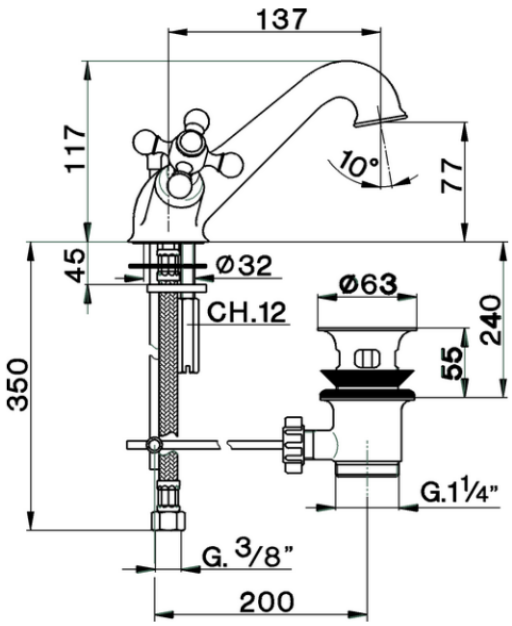

AC000510

https://es.cisal.it/lavabo-arcana-ceramic-ac000510

2026-05-04

© 2021 Cisal. Via Pietro Durio 160 - 28010 - Alzo (NO) - Italia
Mail: cisal@cisal.it, Telefono: (+39) 0322 918111, P.Iva IT02422810032.