Cisal
TEL. (+39) 0322 918111
MAIL. cisal@cisal.it

Lavabo ARCANA CERAMIC_AC000510

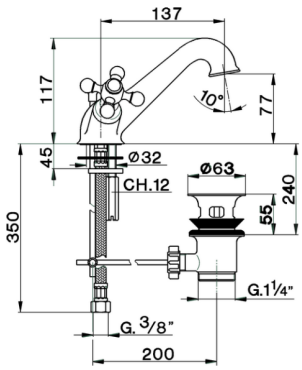

MODELO **AC000510**

Lavabo,con desagüe automático 1"1/4,latiguillos acero G.3/8"

ACABADOS DISPONIBLES

21 21 Cromo

24 24 Oro

26 26 Cobre Viejo

27 27 Bronce Viejo

2A 2A Niquel Satinado Cepillado

74 74 Cromo/Oro

CARACTERÍSTICAS

© 2021 Cisal. Via Pietro Durio 160 - 28010 - Alzo (NO) - Italia
Mail: cisal@cisal.it, Telefono: (+39) 0322 918111, P.Iva IT02422810032.

Lavabo ARCANA CERAMIC_AC000510

cisal

AC 00051

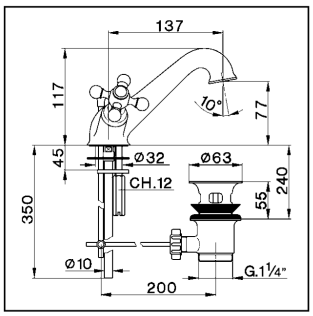

- **Monoforo lavabo**
- ***Single hole basin mixer***
- **Einloch-Waschtischbatterie**
- ***Mélangeur monotrou lavabo***

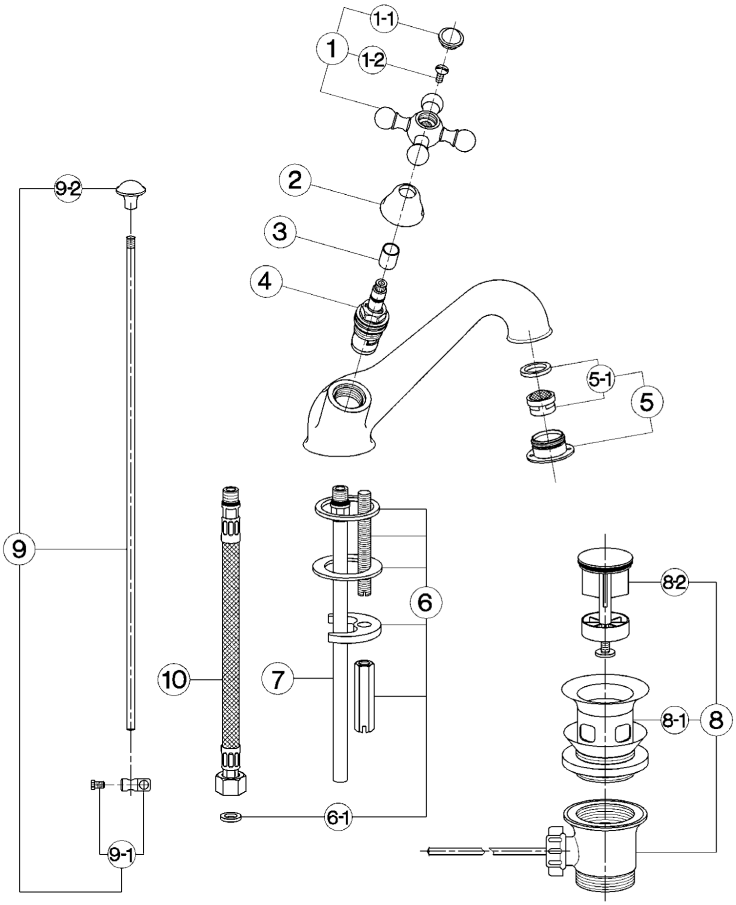

bar	PORTATA BOCCA DI EROGAZIONE * *SPOUT FLOW RATE* DURCHFLUSS WANNENEINLAUF *DÉBIT BEC DÉVERSEUR* l/min.
0.5	10
1	13.5
2	19
3	24
4	27.5
5	30.5

* con resistenza silenziosa della classe di portata B (25.2 l/min. a 3 bar)
with hydraulic resistance of flow rate class B (25.2 l/min. at 3 bar)
mit geräuscharmen Widerstand der Durchflussklasse B (25.2 l/min. bei 3 bar)
avec aérateur classe B (25.2 l/min. à 3 bar)

NR.	DESCRIZIONE *DESCRIPTION* BESCHREIBUNG *DÉSCRIPTION*	N. CODICE *CODE NO.* WERKSNR. *NR. CODE*
1	Maniglia "AR" con vite e placchetta *Handle with screw and plate "AR"* Griff "AR" mit Schraube und Abdeckkappe *Croisillon avec vis et plaquette "AR"*	ZZ 90307 0
1-1	Placchetta a vite maniglia "AR" *Cap for handle "AR"* Abdeckkappe "AR" Griff *Plaquette cache - vis crois. "AR"*	ZZ 92617 0
1-2	Vite M.4,5x10 tb. tc. zigrinata *Screw M.4,5x10* Schraube M.4,5x10 *Vis M.4,5x10*	ZZ 92609 0
2	Cappuccio copri vitone Ø32 H.21 "AC" *Escutcheon Ø32 H.21 "AC" headvalve* Abdeckkappe Ø32 H.21 "AC" *Rosace couvre-tête Ø32 H.21 "AC"*	ZZ 92652 0
3	Tubetto copriasta "AR" H.15,5 *Sliding cover tube "AR" H.15,5* Abdeckkappe Oberteil "AR" H.15,5 *Tube couvre-tête "AR" H.15,5*	ZZ 92619 0
4	Vitone ceramico DX per monofori e gruppi "AC" *Ceramic headvalve 1/2" right "AC"-short* Keramikoberteil 1/2"-rechts-"AC"-kurz *Tête céramique 1/2" droite "AC" - courte*	ZZ 92858 0

NR.	DESCRIZIONE *DESCRIPTION* BESCHREIBUNG *DÉSCRIPTION*	N. CODICE *CODE NO.* WERKSNR. *NR. CODE*
5	Bordino con aeratore M. 24x1 "AR" *Overfill with mousseur M.24x1 "AR"* Perlator M.24x1 "AR" *Garniture avec mousseur M.24x1 "AR"*	ZZ 92785 0
5-1	Cartuccia per aeratore M. 24x1 *Mousseur cartridge M.24x1* Kart. f/Perlator M.24x1 *Cartouche x mousseur M.24x1*	ZZ 92695 0
6	Set installazione monocomando monoforo *Installation set single hole* Befestigungsset *Set installation*	ZZ 92851 0
6-1	Guarnizione fibra 3/8" *Gasket rubber 3/8"* Fiberdichtung 3/8" *Joint en fibre 3/8"*	ZZ 92696 0
7	Tubetto monoforo "SU" con O.R. *Tube with O.R. "SU"* Anschlussrohr mit O.R. "SU" *Tube "SU" avec O.R.*	ZZ 92838 0
8	Scarico automatico 1" 1/4 sabbiato *Pop-up waste 1"1/4* Ablaufgarnitur 1" 1/4 *Vidage automat. 1"1/4*	ZZ 92754 0

NR.	DESCRIZIONE *DESCRIPTION* BESCHREIBUNG *DÉSCRIPTION*	N. CODICE *CODE NO.* WERKSNR. *NR. CODE*
8-1	Piletta per scarico automatico 1" 1/4 *Waste for bath drain 1" 1/4* Ablauf f/Ablaufgarnitur 1" 1/4 *Crépine pour vidage 1" 1/4*	ZZ 92924 0
8-2	Tappo completo scarico automatico 1" 1/4 *Plug for pop-up waste 1" 1/4* Stopfen f/Ablaufg. kpl 1" 1/4 *Bonde - vidage 1"1/4*	ZZ 92925 0
9	Astina scarico completa Ø6 *Rod Ø6* Zugstange Ø6 *Tige Ø6*	ZZ 92759 0
9-1	Morsetto astina scarico automatico Ø6,2 *Connection for pop-up rod Ø6,2* Gelenkstueck f/Zugstange Ø6,2 *Jonction x tige vidage Ø6,2*	ZZ 92622 0
9-2	Pomolo per scarico automatico "AR" *Knob for pop-up rod "AR"* Zugknopf f/Ablaufgarn."AR" *Pommeau - tige "AR"*	ZZ 92624 0
10	Flessibile M.11x1 3/8"F L.365 *Flex M.11x1 3/8" L.365* Anschlussschlauch M.11x1 3/8" L.365 *Flex M.11x1 3/8" L.365*	ZZ 92842 0

AC.6

© 2021 Cisal. Via Pietro Durio 160 - 28010 - Alzo (NO) - Italia
Mail: cisal@cisal.it, Telefono: (+39) 0322 918111, P.Iva IT02422810032.