Cisal
TEL. (+39) 0322 918111
MAIL. cisal@cisal.it

Fregadero monomando abatible ARCANA EMPRESS_EM001530

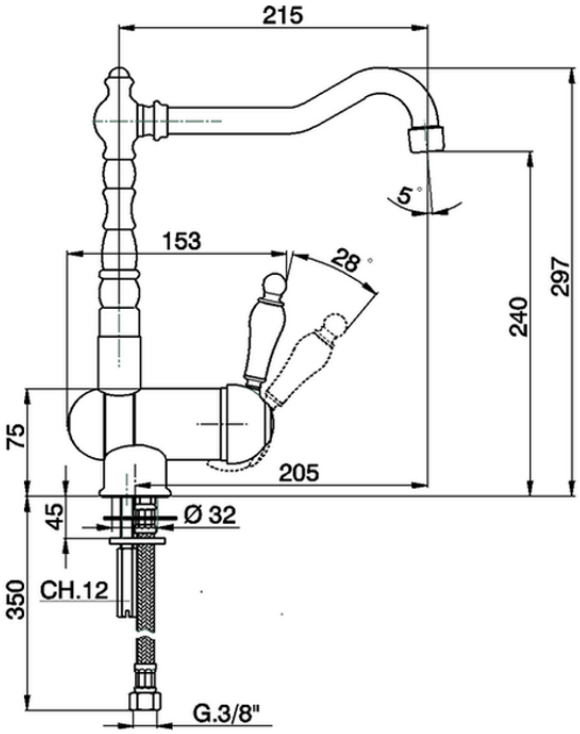

EM001530

https://es.cisal.it/fregadero-monomando-abatible-arcana-empress-em001530

2026-09-15

© 2021 Cisal. Via Pietro Durio 160 - 28010 - Alzo (NO) - Italia
Mail: cisal@cisal.it, Telefono: (+39) 0322 918111, P.Iva IT02422810032.