Cisal
TEL. (+39) 0322 918111
MAIL. cisal@cisal.it

Bañera monomando con duplex ROADSTER ACCENT_RA000120

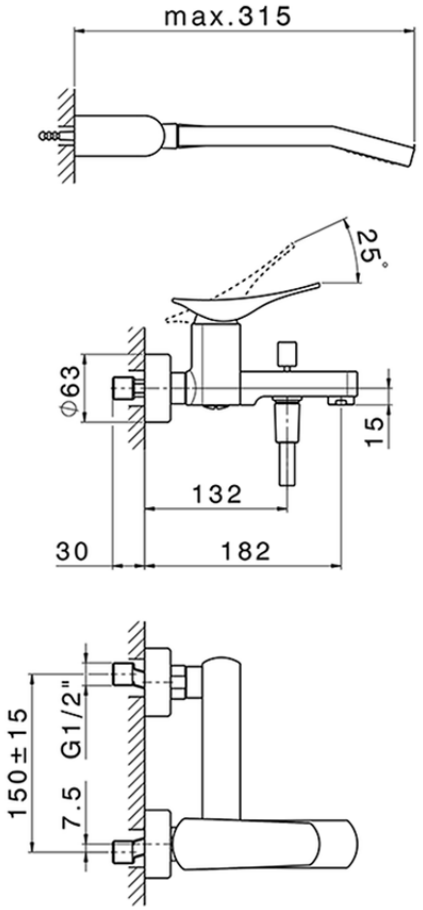

RA000120

https://es.cisal.it/banera-monomando-con-duplex-roadster-accent-ra000120

2026-09-18

© 2021 Cisal. Via Pietro Durio 160 - 28010 - Alzo (NO) - Italia
Mail: cisal@cisal.it, Telefono: (+39) 0322 918111, P.Iva IT02422810032.