Cisal
TEL. (+39) 0322 918111
MAIL. cisal@cisal.it

Ducha monomando ARCANA EMPRESS_EM000441

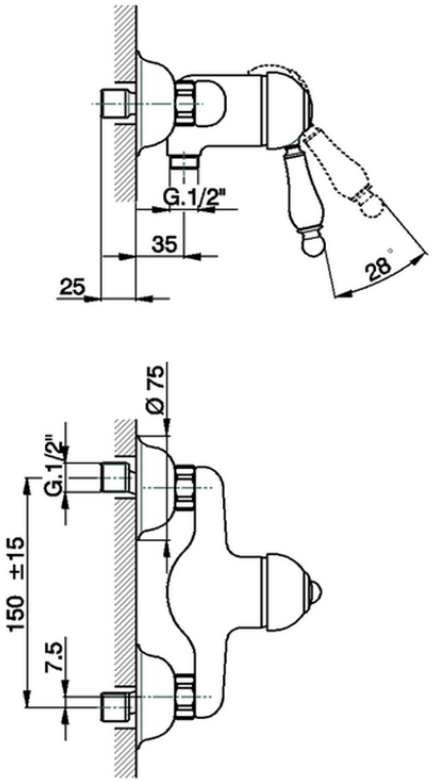

EM000441

https://es.cisal.it/ducha-monomando-arcana-empress-em000441

2026-09-16

© 2021 Cisal. Via Pietro Durio 160 - 28010 - Alzo (NO) - Italia
Mail: cisal@cisal.it, Telefono: (+39) 0322 918111, P.Iva IT02422810032.