Cisal
TEL. (+39) 0322 918111
MAIL. cisal@cisal.it

Parte externa para Push&Shower individual PUSH&SHOWER_PS1G6310

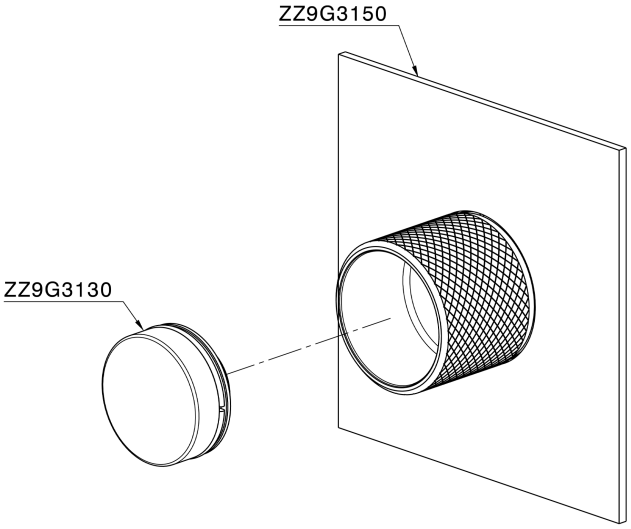

PS1G6310 https://es.cisal.it/parte-externa-para-pushshower-individual-pushshower-ps1g6310

2026-09-14

© 2021 Cisal. Via Pietro Durio 160 - 28010 - Alzo (NO) - Italia
Mail: cisal@cisal.it, Telefono: (+39) 0322 918111, P.Iva IT02422810032.