Cisal
TEL. (+39) 0322 918111
MAIL. cisal@cisal.it

Bañera termostática con barra-corrediza ROADSTER ACCENT_RAS27010

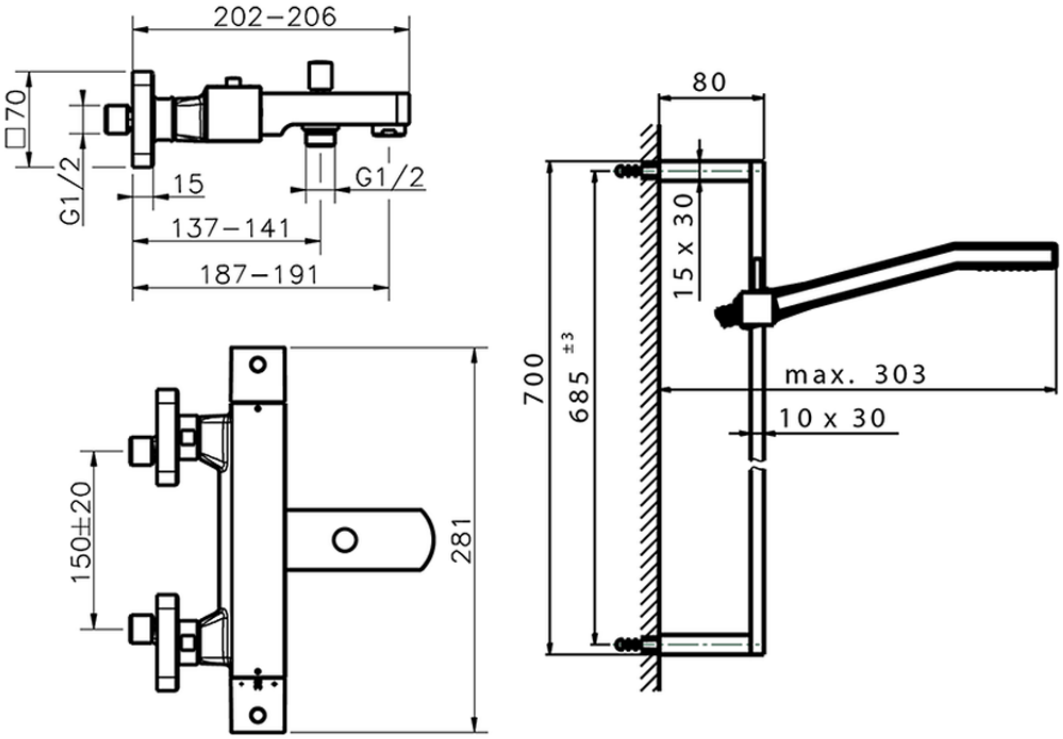

RAS27010

https://es.cisal.it/banera-termostatica-con-barra-corrediza-roadster-accent-ras27010

2026-09-18

© 2021 Cisal. Via Pietro Durio 160 - 28010 - Alzo (NO) - Italia
Mail: cisal@cisal.it, Telefono: (+39) 0322 918111, P.Iva IT02422810032.