Cisal
TEL. (+39) 0322 918111
MAIL. cisal@cisal.it

Sifón minimalista 1" 1/4 COMPLEMENTOS_ZA004042

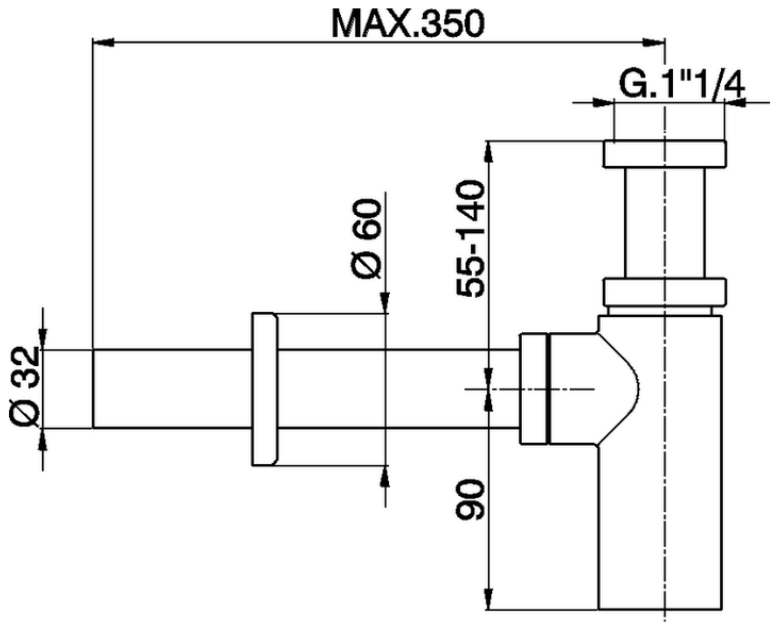

ZA004042

https://es.cisal.it/sifon-minimalista-1-1-4-complementos-za004042

2026-04-30

© 2021 Cisal. Via Pietro Durio 160 - 28010 - Alzo (NO) - Italia
Mail: cisal@cisal.it, Telefono: (+39) 0322 918111, P.Iva IT02422810032.