Cisal
TEL. (+39) 0322 918111
MAIL. cisal@cisal.it

Lavabo 3 agujeros NUANCE X32_X1001040

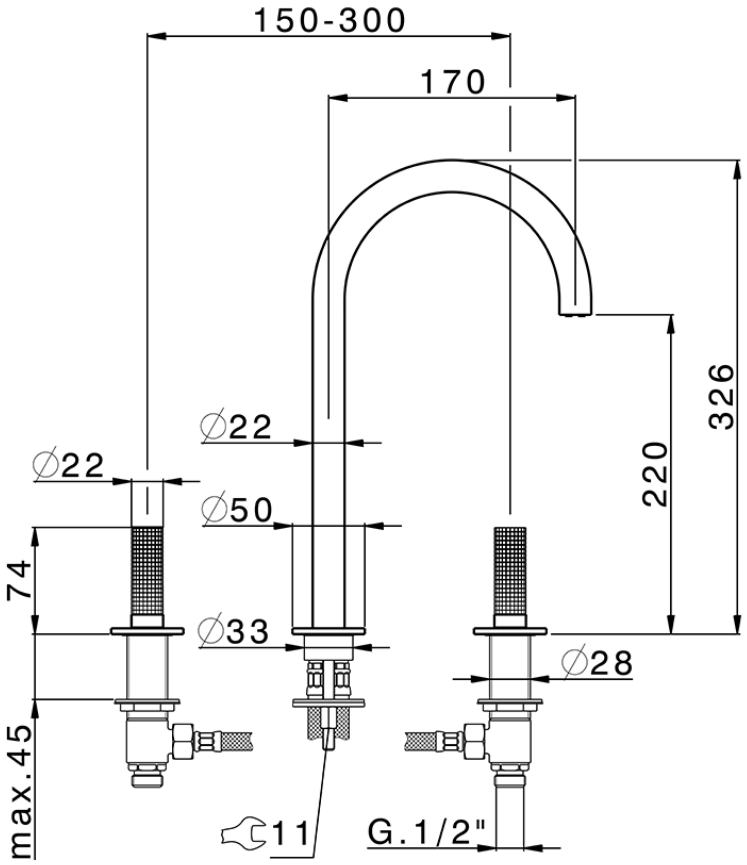

X1001040

https://es.cisal.it/lavabo-3-agujeros-nuance-x32-x1001040

2026-03-14

© 2021 Cisal. Via Pietro Durio 160 - 28010 - Alzo (NO) - Italia
Mail: cisal@cisal.it, Telefono: (+39) 0322 918111, P.Iva IT02422810032.