Cisal
TEL. (+39) 0322 918111
MAIL. cisal@cisal.it

Grifo de un sólo agua ROADSTER ACCENT_RR000900

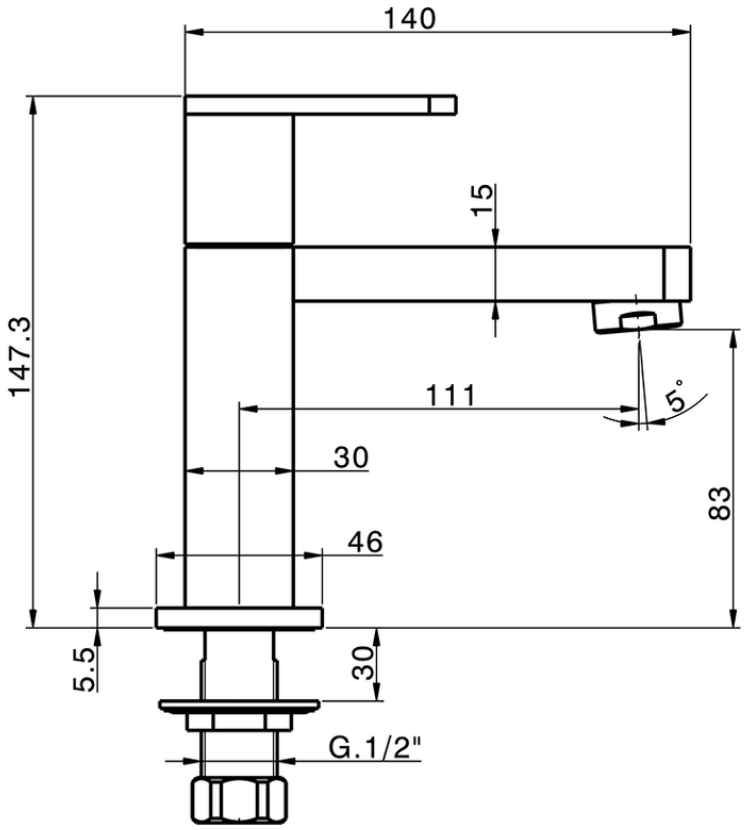

RR000900

https://es.cisal.it/grifo-de-un-solo-agua-roadster-accent-rr000900

2026-01-28

© 2021 Cisal. Via Pietro Durio 160 - 28010 - Alzo (NO) - Italia
Mail: cisal@cisal.it, Telefono: (+39) 0322 918111, P.Iva IT02422810032.