Cisal
TEL. (+39) 0322 918111
MAIL. cisal@cisal.it

Conjunto ducha barra corrediza Xion XION_DS010630

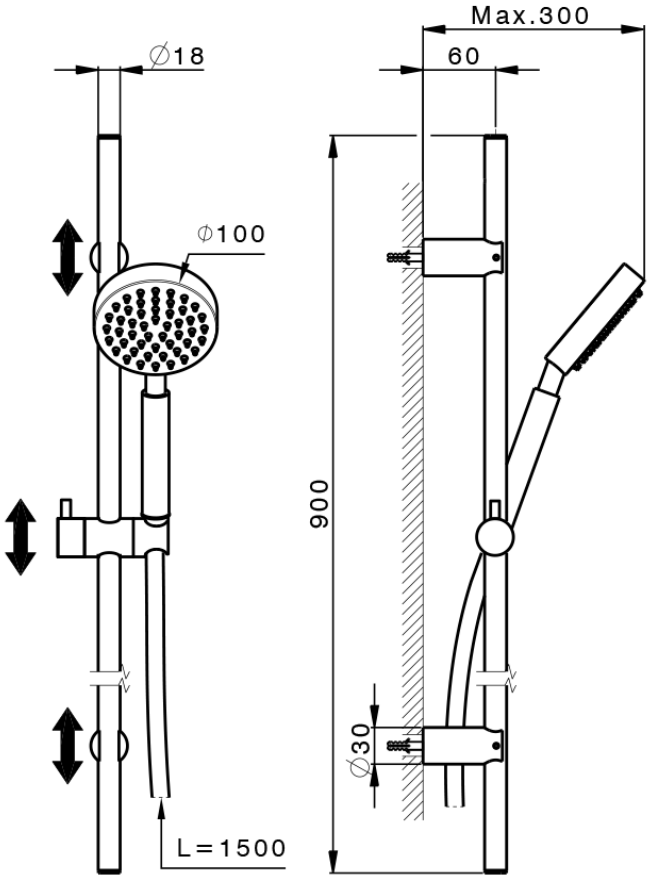

DS010630

https://es.cisal.it/conjunto-ducha-barra-corrediza-xion-xion-ds010630

2026-06-15

© 2021 Cisal. Via Pietro Durio 160 - 28010 - Alzo (NO) - Italia
Mail: cisal@cisal.it, Telefono: (+39) 0322 918111, P.Iva IT02422810032.