Fregadero monomando ARCANA ROYAL_AY002530

cisal

AY 00253

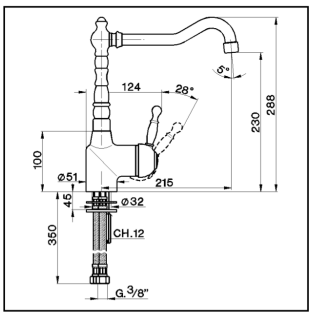

- **Monocomando lavello**
- ***Single lever sink mixer***
- **Einhand-Spültischbatterie**
- ***Mitigeur évier***

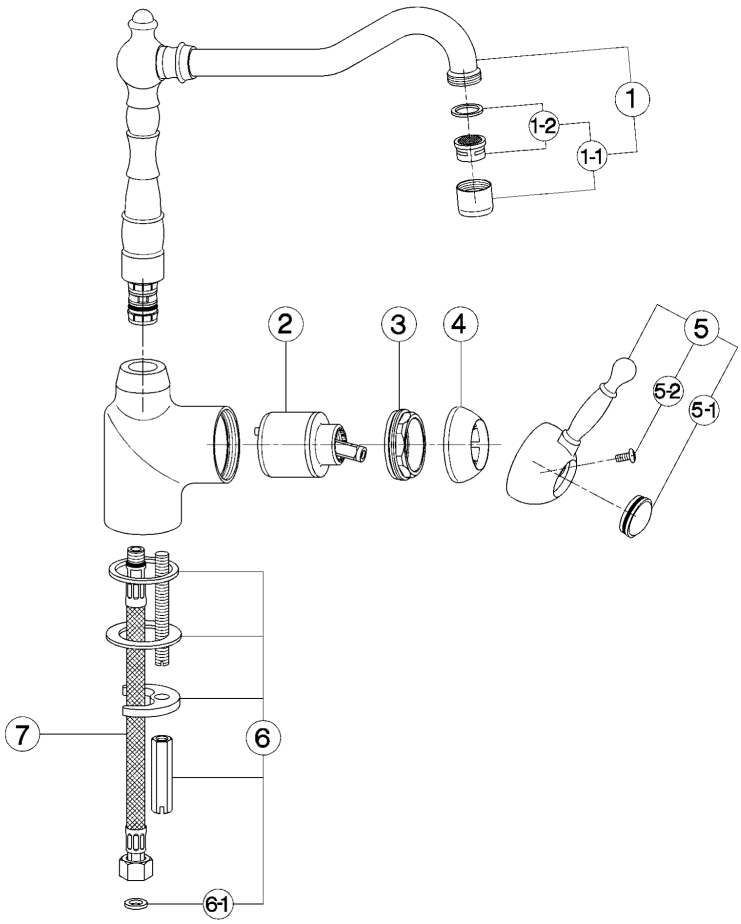

bar	PORTATA BOCCA DI EROGAZIONE * *SPOUT FLOW RATE* DURCHFLUSS WANNENEINLAUF *DÉBIT BEC DÉVERSEUR* l/min.
0.5	5.5
1	8
2	11
3	13.5
4	15.5
5	17.5

* con resistenza silenziosa della classe di portata A (15 l/min. a 3 bar)
with hydraulic resistance of flow rate class A (15 l/min. at 3 bar)
mit geräuscharmen Widerstand der Durchflussklasse A (15 l/min. bei 3 bar)
avec aérateur classe A (15 l/min. à 3 bar)

NR.	DESCRIZIONE *DESCRIPTION* BESCHREIBUNG *DÉSCRIPTION*	N. CODICE *CODE NO.* WERKSNR. *NR. CODE*
1	Canna alta "RE" per monocomando *Spout "RE" for single lever mixer* Auslauf-Rohr-U-"RE" f/EHM *Bec "RE" pour mitigeur*	ZZ 93027 0
1-1	Aeratore M.22x1 IA Cascade *Mousseur M.22x1 IA Cascade* Perlator M.22x1 IA Cascade *Mousseur M.22x1 IA Cascade*	ZZ 93345 0
1-2	Cartuccia per aeratore M. 22x1 Cascade *Mousseur cartridge M.22x1 Cascade* Kart. f/Perlator M.22x1 Cascade *Cartouche x mousseur M.22x1 Cascade*	ZZ 93339 0
2	Cartuccia monocomando piccola *Mixing valve - small size* Kartusche *Cartouche mitigeurs*	ZZ 92909 0
3	Calotta bloccaggio cartuccia piccola *Nut for mixing valve-small* Mutter f/Kartusche *Ecrou pour cartouche*	ZZ 92603 0
4	Copricartuccia con ideogrammi *Escutcheon cartridge with ideogram* Abdeckkappe mit Ideogramm *Couvre-cartouche avec ideogramme*	ZZ 92716 0
5	Leva monocomando "AY" *Lever "AY"* Hebel "AY" *Levier "AY"*	ZZ 90370 0
5-1	Placchetta per leva "AY" *Cap for lever "AY"* Abdeckkappe f/Hebel "AY" *Plaquette levier "AY"*	ZZ 93048 0
5-2	Vite M.4,5x15 tb. tc. *Screw M.4,5x15* Schraube M.4,5x15 *Vis M.4,5x15*	ZZ 92641 0
6	Set installazione monocomando monoforo *Installation set single hole* Befestigungsset *Set installation*	ZZ 92851 0
6-1	Guarnizione fibra 3/8" *Gasket rubber 3/8"* Fiberdichtung 3/8" *Joint en fibre 3/8"*	ZZ 92696 0
7	Flessibile M.11x1 3/8"F L.380 *Flex M.11x1 3/8" L.380* Anschlussschlauch M.11x1 3/8" L.380 *Flex M.11x1 3/8" L.380*	ZZ 92804 0

AY.11

AY002530 https://es.cisal.it/fregadero-monomando-arcana-royal-ay002530

2026-04-30

© 2021 Cisal. Via Pietro Durio 160 - 28010 - Alzo (NO) - Italia
Mail: cisal@cisal.it, Telefono: (+39) 0322 918111, P.Iva IT02422810032.