Lavabo monomando ARCANA ROYAL_AY000510

cisal

AY 00051

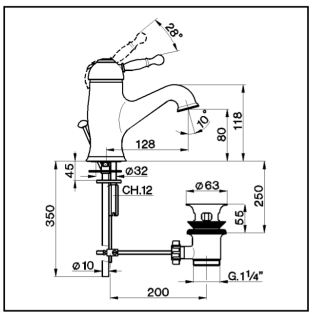

- **Monocomando lavabo**
- ***Single lever wash basin mixerr***
- **Einhand-Waschtischbatterie**
- ***Mitigeur lavabo***

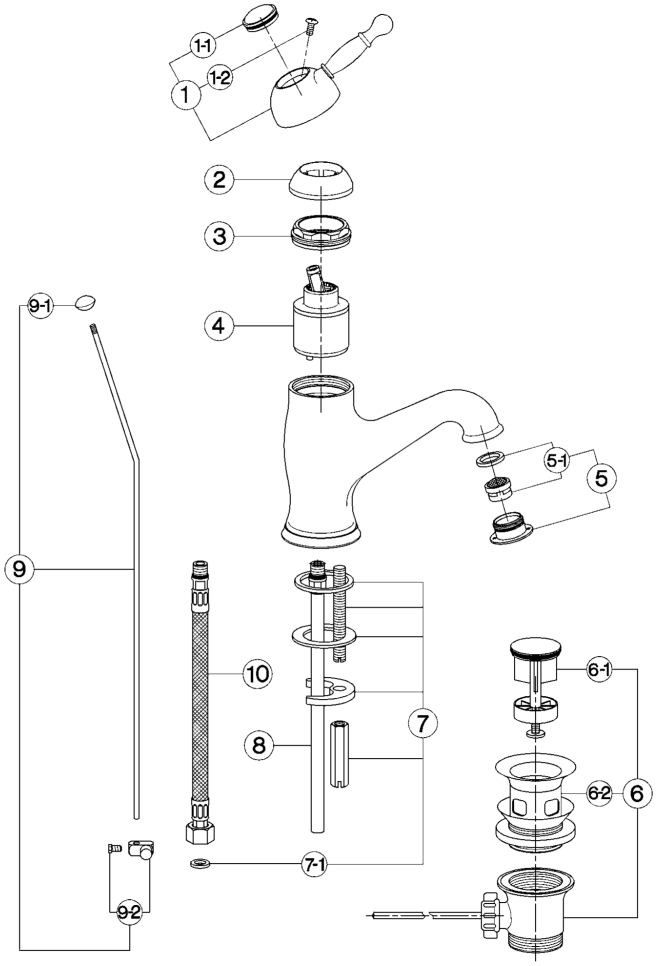

bar	PORTATA BOCCA DI EROGAZIONE * *SPOUT FLOW RATE* DURCHFLUSS WANNENEINLAUF *DÉBIT BEC DÉVERSEUR* l/min.
0.5	6
1	8
2	11.5
3	13.5
4	15.5
5	17.5

* con resistenza silenziosa della classe di portata A (15 l/min. a 3 bar)
with hydraulic resistance of flow rate class A (15 l/min. at 3 bar)
mit geräuscharmen Widerstand der Durchflussklasse A (15 l/min. bei 3 bar)
avec aérateur classe A (15 l/min. à 3 bar)

NR.	DESCRIZIONE *DESCRIPTION* BESCHREIBUNG *DÉSCRIPTION*	N. CODICE *CODE NO.* WERKSNR. *NR. CODE*
1	Leva monocomando "AY" *Lever "AY"* Hebel "AY" *Levier "AY"*	ZZ 90370 0
1-1	Placchetta per leva "AY" *Cap for lever "AY"* Abdeckkappe f/Hebel "AY" *Plaquette levier "AY"*	ZZ 93048 0
1-2	Vite M.4,5x15 tb. tc. *Screw M.4,5x15* Schraube M.4,5x15 *Vis M.4,5x15*	ZZ 92641 0
2	Copricartuccia senza ideogrammi *Escutcheon cartridge without ideogram* Abdeckkappe ohne Ideogramm *Couvre-cartouche sans ideogramme*	ZZ 92718 0
3	Calotta bloccaggio cartuccia piccola *Nut for mixing valve-small* Mutter f/Kartusche *Ecrou pour cartouche*	ZZ 92603 0
4	Cartuccia monocomando piccola *Mixing valve - small size* Kartusche *Cartouche mitigeurs*	ZZ 92909 0

NR.	DESCRIZIONE *DESCRIPTION* BESCHREIBUNG *DÉSCRIPTION*	N. CODICE *CODE NO.* WERKSNR. *NR. CODE*
5	Bordino con aeratore M. 24x1 "AR" Cascade *Overfill with mousseur M.24x1 "AR" Cascade* Perlator M.24x1 "AR" Cascade *Garniture avec mousseur M.24x1 "AR" Cascade*	ZZ 93398 0
5-1	Cartuccia per aeratore M. 24x1 Cascade *Mousseur cartridge M.24x1 Cascade* Kart. f/Perlator M.24x1 Cascade *Cartouche x mousseur M.24x1 Cascade*	ZZ 93399 0
6	Scarico automatico 1" 1/4 sabbiato *Pop-up waste 1"1/4* Ablaufgarnitur 1" 1/4 *Vidage automat. 1"1/4*	ZZ 92754 0
6-1	Tappo completo scarico automatico 1" 1/4 *Plug for pop-up waste 1" 1/4* Stopfen f/Ablaufg. kpl 1" 1/4 *Bonde - vidage 1"1/4*	ZZ 92925 0
6-2	Piletta per scarico automatico 1" 1/4 *Waste for bath drain 1" 1/4* Ablauf f/Ablaufgarnitur 1" 1/4 *Crépine pour vidage 1" 1/4*	ZZ 92924 0
7	Set installazione monocomando monoforo *Installation set single hole* Befestigungsset *Set installation*	ZZ 92851 0

NR.	DESCRIZIONE *DESCRIPTION* BESCHREIBUNG *DÉSCRIPTION*	N. CODICE *CODE NO.* WERKSNR. *NR. CODE*
7-1	Guarnizione fibra 3/8" *Gasket rubber 3/8"* Fiberdichtung 3/8" *Joint en fibre 3/8"*	ZZ 92696 0
8	Tubetto monoforo "SU" con O.R. *Tube with O.R. "SU"* Anschlussrohr mit O.R. "SU" *Tube "SU" avec O.R.*	ZZ 92838 0
9	Astina scarico completa Ø4 *Rod Ø4* Zugstange Ø4 *Tige Ø4*	ZZ 92044 0
9-1	Pomolo per scarico automatico *Knob for pop-up rod* Zugknopf Ablaufgar. *Pommeau - tige*	ZZ 92644 0
9-2	Morsetto snodato per astina Ø5,2 *Connection for pop-up rod Ø5,2* Gelenkstueck f/Zugstange Ø5,2 *Jonction x tige vidage Ø5,2*	ZZ 92614 0
10	Flessibile M.11x1 3/8"F L.365 *Flex M.11x1 3/8" L.365* Anschlussschlauch M.11x1 3/8" L.365 *Flex M.11x1 3/8" L.365*	ZZ 92842 0

AY.5

AY000510 https://es.cisal.it/lavabo-monomando-arcana-royal-ay000510

2026-09-14

© 2021 Cisal. Via Pietro Durio 160 - 28010 - Alzo (NO) - Italia
Mail: cisal@cisal.it, Telefono: (+39) 0322 918111, P.Iva IT02422810032.