Cisal
TEL. (+39) 0322 918111
MAIL. cisal@cisal.it

Rociador de techo con cromoterapia Ø 570 mm WELLNESS_ZS0C0170

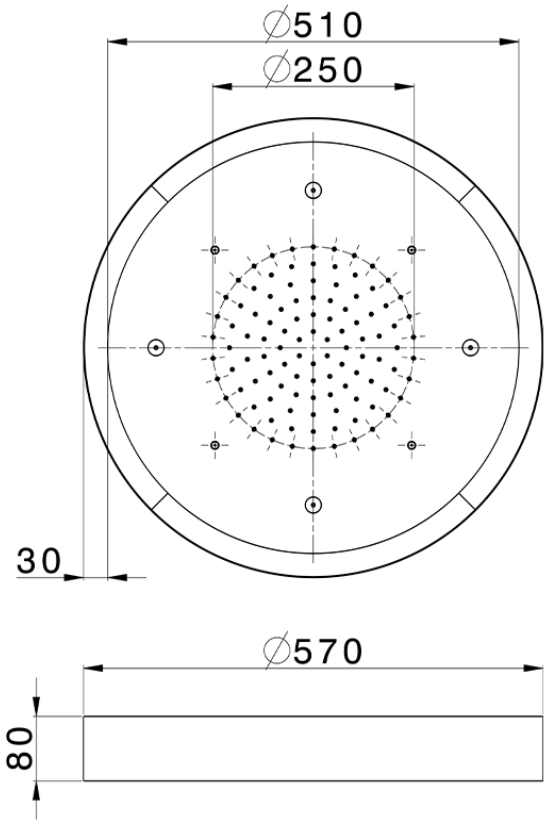

ZS0C0170

https://es.cisal.it/rociador-de-techo-con-cromoterapia-o-570-mm-wellness-zs0c0170

2026-09-15

© 2021 Cisal. Via Pietro Durio 160 - 28010 - Alzo (NO) - Italia
Mail: cisal@cisal.it, Telefono: (+39) 0322 918111, P.Iva IT02422810032.