Cisal
TEL. (+39) 0322 918111
MAIL. cisal@cisal.it

Lavabo monomando alto NUOVA LESS_LN003540

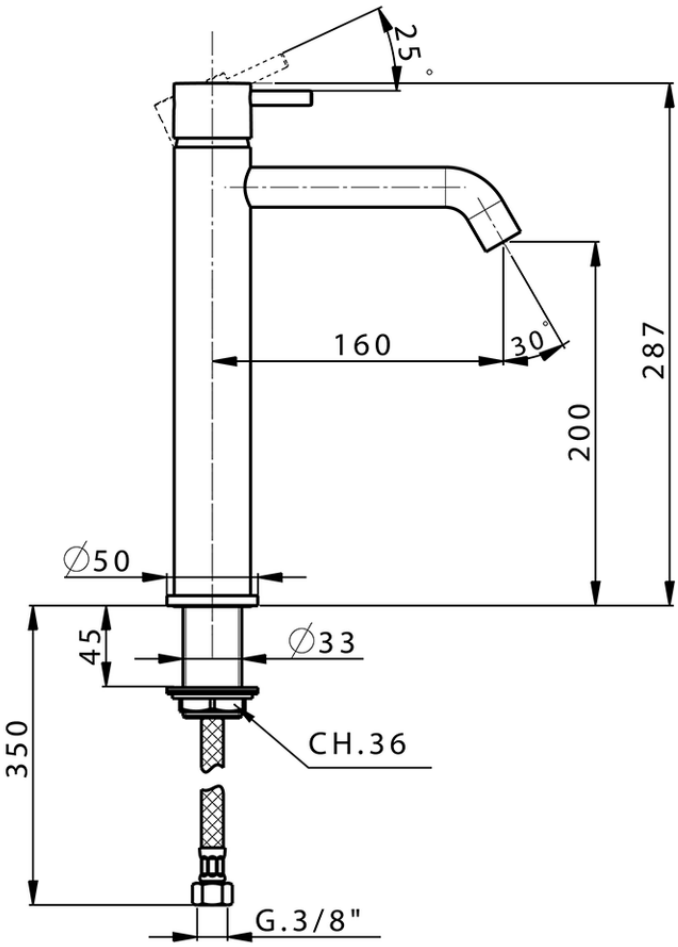

LN003540

https://es.cisal.it/lavabo-monomando-alto-nuova-less-ln003540

2026-09-14

© 2021 Cisal. Via Pietro Durio 160 - 28010 - Alzo (NO) - Italia
Mail: cisal@cisal.it, Telefono: (+39) 0322 918111, P.Iva IT02422810032.