Cisal
TEL. (+39) 0322 918111
MAIL. cisal@cisal.it

Borde bañera termostático 4 agujeros GRACE_GLT76010

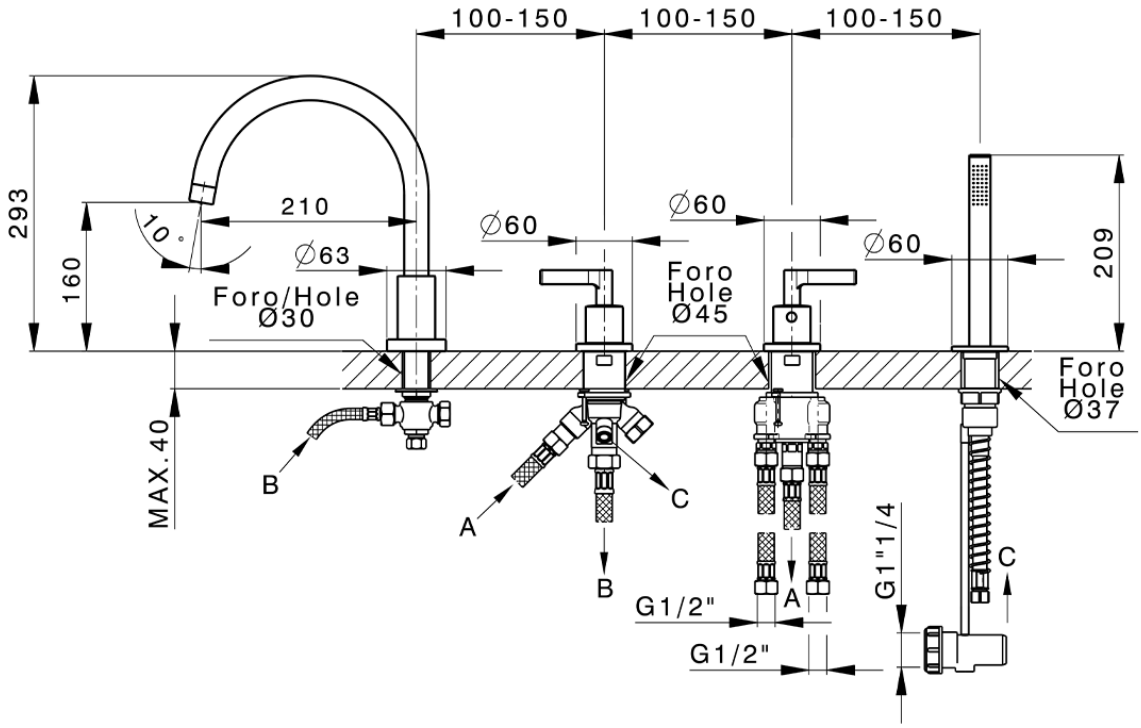

GLT76010

https://es.cisal.it/borde-banera-termostatico-4-agujeros-grace-glt76010

2026-09-13

© 2021 Cisal. Via Pietro Durio 160 - 28010 - Alzo (NO) - Italia
Mail: cisal@cisal.it, Telefono: (+39) 0322 918111, P.Iva IT02422810032.