Fregadero de pared TR_TR000400

cisal

TR 00040 (TR 00044)

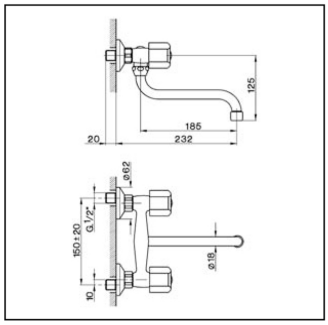

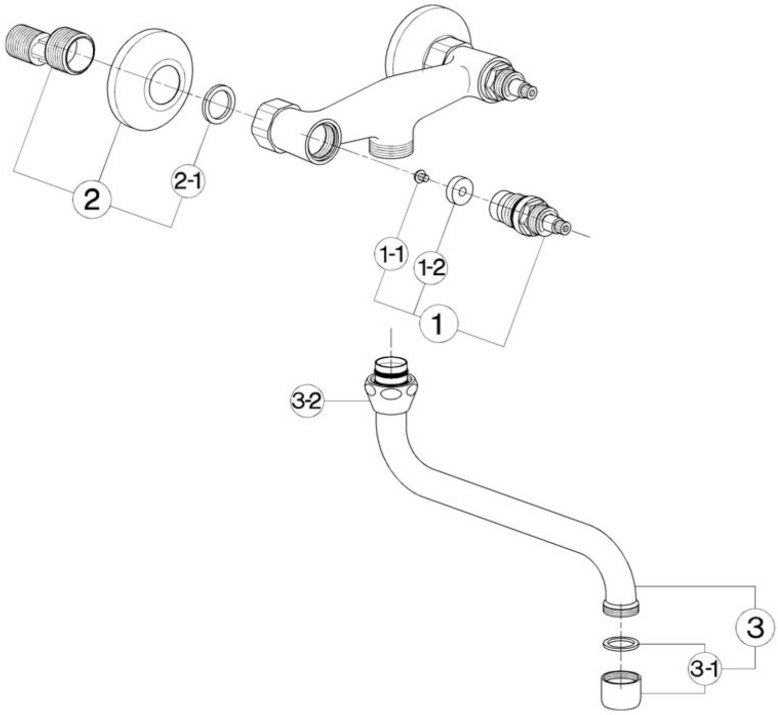

- **Gruppo lavello**
- ***Sink mixer***
- **Spültisch-Wandbatterie**
- ***Mélangeur évier mural***

bar	PORTATA BOCCA DI EROGAZIONE * *SPOUT FLOW RATE* DURCHFLUSS WANNENEINLAUF *DÉBIT BEC DÉVERSEUR* l/min.
0.1	20.5
0.2	27.5
0.3	36
0.4	41.5
0.5	46.5
1	66

* con rompigetto
with antisplash
mit Strahlregler
avec brise-jet

NR.	DESCRIZIONE *DESCRIPTION* BESCHREIBUNG *DÉSCRIPTION*	N. CODICE *CODE NO.* WERKSNR. *NR. CODE*
1	Vitone 1/2" "TR" *Headvalve 1/2" "TR"* Oberteil 1/2" "TR" *Tête 1/2" "TR"*	ZZ 92869 0
1-1	Vite M.4x4,5 tb. Ø8 t.cr. *Screw M.4x4,5* Schraube M.4x4,5 *Vis M.4x4,5*	ZZ 92625 0
1-2	Guarnizione NBR 90 SH. 16,9x5,5x5 *Gasket NBR 90 SH. 16,9x5,5x5* Dichtung NBR 90 SH. 16,9x5,5x5 *Joint NBR 90 SH. 16,9x5,5x5*	ZZ 92699 0
2	Eccentrico con rosone *Excentric connection with escutcheon* S - Anschluss m.Rosette *Excentrique + rosace*	ZZ 92730 0
2-1	Guarnizione NBR 90 SH. 24x16x2,7 *Gasket NBR 90 SH. 24x16x2,7* Dichtung NBR 90 SH. 24x16x2,7 *Joint NBR 90 SH. 24x16x2,7*	ZZ 92689 0
3	Canna a S Ø18 interasse 185 *Swinging spout 185 Ø18* Auslauf-Rohr-S-185 Ø18 *Bec orientable 185 Ø18*	ZZ 92735 0

NR.	DESCRIZIONE *DESCRIPTION* BESCHREIBUNG *DÉSCRIPTION*	N. CODICE *CODE NO.* WERKSNR. *NR. CODE*
3-1	Rompigetto M.22x1 *Antisplash M.22x1* Strahlregler M.22x1 *Brise-jet M.22x1*	ZZ 92771 0
3-2	Calotta 3/4" es.29 Ø19,5 *Nut 3/4" Ø19,5* Mutter 3/4" Ø19,5 *Ecrou 3/4" Ø19,5*	ZZ 92615 0

NR.	DESCRIZIONE *DESCRIPTION* BESCHREIBUNG *DÉSCRIPTION*	N. CODICE *CODE NO.* WERKSNR. *NR. CODE*

© 2021 Cisal. Via Pietro Durio 160 - 28010 - Alzo (NO) - Italia
Mail: cisal@cisal.it, Telefono: (+39) 0322 918111, P.Iva IT02422810032.